GA300

owner's manual

LX300AU

READ THIS MANUAL CAREFULLY
It contains important safety information
This ATV should not be ridden by
anyone under 16 years of age.

FOREWORD

Thanks for purchasing LX300AU. This manual includes important safety information. It provides information about special techniques and skills necessary to ride this vehicle. It also includes the details to operate and necessary maintenance procedure to perform safely.

IMPORTANT SAFETY MESSAGE:

- PAY ATTENTION TO THE CAUTION AND WARNING LABELS ON THIS ATV.
- READ THIS MANUAL BEFORE OPERATING THIS ATV. MAKE SURE YOU UNDERSTAND ALL INSTRUCTION. ALSO KEEP ALL INFORMATION IN MIND WHILE OPERATING THIS ATV.
- ANYONE UNDER AGE 16 SHOULD NEVER BE ALLOWED TO OPERATE ATV LX300AU.
- KEEP THIS MANUAL IN THE WATERPROOF PLACTIC BAG AND STORED IN THE COMPARTMENT PROVIDED BY YOUR ATV.
- FAILURE TO FOLLOW THE WARNINGS CONTAINED IN THIS MANUAL CAN RESULT IN SERIOUS INJURY OR DEATH.
- NEVER CARRY A PASSENGER ON THIS ATV

IMPORTANT NOTICE TO PARENTS AND ADULTS

- THIS ATV IS NOT A TOY.
- YOU SHOULD UNDERSTAND THE INSTRUCTIONS AND WARNINGS IN THIS MANUAL BEFORE YOU LET YOUR CHILD RIDE THIS ATV. THEN BE SURE YOUR CHILD UNDERSTANDS AND WILL FOLLOW THEM.
- THIS ATV SHOULD ONLY BE OPERATED UNDER THE DIRECT SUPERVISION OF AN ADULT.
- NEVER EXCEED YOUR RIDING CAPABILITIES.
- THIS ATV CAN BE HAZARDOUS TO OPERATE, AVOID EXCESSIVE SPEED, PAVED SURFACES, SHARP TURNS, AND UNEVEN TERRAIN.
- ADULTS SHOULD ADJUST THE THROTTLE FOR SLOWER SPEEDS.
- NEVER RIDE THIS ATV DURING LOW LIGHT CONDITIONS.
- CHILDREN DIFFER IN SKILLS. SOME CHILDREN MAY NOT BE ABLE TO OPERATE AN ATV SAFETY. PARENTS SHOULD PERMIT CONTINUED USE ONLY IF THEY DETERMINE THAT THE CHILD HAS THE ABILITY TO OPERATE THE ATV SAFETY.
- IF YOUR CHILD IS INEXPERIENCED IN RIDING ATV, HE OR SHE SHOULD TAKE A TRAINING COURSE BEFORE OPERATING THIS ATV.

Whenever you see the symbols shown below, heed their instructions. Always follow safe operating and maintenance practices.

⚠ WARNING

HAZARD

Failure to heed WARNINGS.

WHAT CAN HAPPEN

WARNINGS identify special instructions or procedures which, if not correctly followed, could result in serious injury or death.

HOW TO AVOID THE HAZARD

Read all WARNINGS in this manual carefully and for your safety be sure to follow their instruction.

CAUTION

This caution symbol identifies special instruction Or procedures which, if not strictly observed, could Result in damage to or destruction of equipment.

NOTE

This note symbol indicates points of particular interest for more efficient and convenient operation.

FAILURE TO FOLLOW THE WARNINGS CONTAINED IN THIS MANUAL CAN RESULT IN SERIOUS INJURY OR DEATH.

IMPORTANT NOTICE

Off-road vehicle riding is a wonderful sport, and we hope you will enjoy it to the fullest.

This vehicle is designed and manufactured for off-road use only. It is illegal and unsafe to operate this vehicle on any public road, street and highway.

Read this manual carefully and completely before starting your new ATV

It contains important safety information. Never operate this ATV without proper instruction. Beginner should take a training course before operating this vehicle.

Never allow a child under the age 16 to operate this ATV. Use of this ATV by children under 16 years of age can lead to severe injury of death of the child. Even youths starting at age 16 may not have the skills, abilities, or judgment needed to operate this ATV safety. Therefore youths starting at age 16 should have adult supervision even after they attend a training course.

To protect your safety, make sure you use your vehicle legally, show concern for the environment, and respect the rights of other people.

This Operator's Guide has been prepared to acquaint the owner/operator of a new vehicle with the various vehicle controls, maintenance and safe operating instructions. It is indispensable for the proper use of the product.

The information contained in this document is correct at the time of publication. However, LX maintains a policy of continuous improvement of its products without imposing upon itself any obligation to install them on products previously manufactured. Due to late changes, some differences between the manufactured product and the descriptions and/or specifications in this guide may occur. LX reserves the right at any time to discontinue on change specifications, designs, features, models or equipment without incurring any obligation upon itself. This Operator's Guide should remain with the vehicle when it is sold.

TABLE OF CONTENTS

SAFETY INFORMATION 1-1

LOCATION OF THE WARNING AND SPECIFICATION LABELS 2-1

DESCRIPTION AND VEHICLE IDENTIFICATION 3-1

- Identification number records 3-1
- Vehicle identification number 3-1
- Description of the vehicle parts 3-4

CONTROL FUNCTIONS 4-1

- Cig Lighter 4-1
- Main switch 4-2
- Handlebar switches 4-5
- Throttle limiter 4-7
- Speed limiter 4-10
- Brake Lever 4-11
- Brake pedal 4-12
- Parking brake 4-13
- Front and rear carriers 4-15
- Fuel cock 4-16
- Fuel Tank 4-17
- Seat 4-23
- Drive select lever 4-24

PRE- OPERATION CHECKS 5-1

- Pre-Ride Inspection Check List 5-1
- Brakes 5-7
- Fuel 5-8

Engine Oil 5-8
Switches 5-9
Fittings and Fasteners 5-9
Tires 5-9
OPERATION 6-1
Starting a cold engine 6-1
Moving Off 6-2
To decelerate:..... 6-2
Engine break-in 6-3
Parking 6-3
Loading..... 6-3
RIDING YOUR ATV 7-1
Operator safety 7-1
Know your ATV before riding 7-2
Ride with care and judgment 7-2
Apparel..... 7-3
Pre-operation checks 7-6
Loading and accessories 7-7
Never exceed the stated load capacity for this ATV. 7-7
During operation 7-8
Exhaust system 7-9
Be careful where you ride.....7-10
Turning you ATV 7-14
Climbing uphill 7-16
Riding downhill 7-19
Crossing a slope 7-21
Crossing through shallow water 7-23
Riding over rough terrain.....7-24
Sliding and skidding 7-24
What to do of if 7-25
What to do.....7-25

PERIODIC MAINTENANCE AND ADJUSTMENT 8-1
Owner's manual and tool kit..... 8-1
Periodic maintenance chart for the emission control system..... 8-2
General maintenance and lubrication chart..... 8-5
Engine Oil 8-11
Rear Final Gear Case Oil 8-20
Cooling System..... 8-25
Checking plug..... 8-29
To check the spark plug..... 8-30
To install the spark plug 8-31
Air filter cleaning..... 8-32
Carburetor adjustment 8-37
Idle speed adjustment 8-37
Valve clearance adjustment.....8-37
Spark Arrester 8-38
Shift Lever.....8-41
Belt Drive Transmission (CVT).....8-43
Brakes 8-46
Cable inspection and lubrication 8-49
Wheel removal 8-50
Wheel installation.....8-50
Replenishing the battery fluid 8-50
Fuse replacement 8-51
Troubleshooting charts.....8-52
CLEANING AND STORAGE 9-1
Cleaning 9-1
Storage.....9-2
SPECIFICATION 10-1

SAFETY INFORMATION

AN ATV IS NOT A TOY AND CAN BE HAZARDOUS TO OPERATE. An ATV handles differently from other vehicles including motorcycle and cars. A collision or rollover can occur quickly, even during routine maneuvers such as turning and driving on hills or over obstacles, if you fail to take proper precautions.

SEVERE INJURY OR DEATH can result if you do not follow these instructions:

- Read this manual and all labels carefully and follow the operating procedures described.
- Never operate an ATV without proper instruction. Take a training course. Beginners should receive training from a certified instructor.
- Never allow a child under age 16 to operate ATV without adult supervision, and never allow continued use of an ATV by a child if he or she does not have the abilities to operate it safely.
- Never carry a passenger on an ATV.
- Never operate an ATV on any public road, street or highway, even dirt or gravel one.
- Never consume alcohol or drugs before or while operating this ATV.
- Never operate an ATV without wearing an approved motorcycle helmet that fits properly. You should also wear eye protection (face shield or goggles), gloves, boots, long-sleeved shirt or jacket, and long pants.

- Always avoid operating an ATV on any paved surfaces, including driveways, sidewalks, streets and parking lots.
- Always go slowly and be extra careful when operating on unfamiliar terrain. Always be alert to changing terrain conditions when operating the ATV.
- Always follow proper procedures for turning as described in this manual. Practice turning at low speeds before attempting to turn at faster speeds. Do not turn at excessive speed.
- Never operate on excessively rough, slippery or loose terrain until you have learned and practiced the skill necessary to control the ATV on such terrain. Always be especially cautious on these kinds of terrain.
- Always keep both hands on the handlebars and both feet on the footrests of the ATV during operation.
- Always inspect your ATV each time you use it to make sure it is in safe operating condition. Always follow the inspection and maintenance procedures and schedules described in this manual.
- Never attempt wheelies, jumps, or other stunts.
- Never operate at speeds too fast for your skills or the conditions. Always go at a speed that is proper for the terrain, visibility and operating conditions, and your experience.
- Never exceed the stated load capacity for an ATV. Cargo should be properly distributed and

securely attached. Reduce speed and follow instructions in this manual for carrying cargo or pulling a trailer. Allow greater distance for braking.

- Never modify an ATV through improper installation or use of accessories.
- Never operate the ATV on hills too steep for the ATV or for your abilities. Practice on smaller hills before attempting larger hills.
- Always follow proper procedures for climbing hills as described in this manual. Check the terrain carefully before you start up any hill. Never climb hills with excessively slippery or loose surfaces. Shift your weight forward. Never open the throttle suddenly or make sudden gear changes. Never go over the top of a hill at high speed.
- Always use the size and type tires specified in this manual. Always maintain proper tire pressure as described in this manual.
- Never attempt to operate over large obstacles, such as large rocks or fallen trees. Always follow proper procedures when operating over obstacles as described in this manual.
- Always use proper procedures if you stall or roll backwards when climbing a hill. To avoid stalling, use proper gear and maintain a steady speed when climbing a hill. If you stall or roll backwards, follow the special procedure for braking described in this manual. Dismount on the uphill side or to a side if pointed straight uphill. Turn the ATV around and remount, follow the procedure described in this manual.

- Always be careful when skidding or sliding. Learn to safety control skidding or sliding by practicing at low speeds and on level, smooth terrain. On extremely slippery surface, such as ice, go slowly and be very cautious in order to reduce the chance of skidding or sliding out of control
- Never operate an ATV in fast flowing water or in water deeper than the recommended in this manual. Remember that wet brakes may have reduced stopping ability. Test your brakes after leaving water. If necessary, apply those several times to let friction dry out the linings.
- Always follow proper procedures for going down hills and for braking on hills as described in this manual. Check the terrain carefully before you start down any hill. Shift your weight backward. Never go down a hill at high speed. Avoid going down a hill at an angle that will cause the ATV to lean sharply to one side. Go straight down the hill where possible.
- Always follow proper procedures for crossing the side of a hill as described in this manual. Avoid hills with excessively slippery or loose surface. Shift your weight to the uphill side of the ATV. Never attempt to turn the ATV around on any hill until you have mastered the turning technique described in this manual on level ground. Avoid crossing the side of a steep hill if possible.
- Always check for obstacles before operating in a new area

⚠ WARNING

POTENTIAL HAZARD

Operating this vehicle without proper instruction.

WHAT CAN HAPPEN

The risk of an accident is greatly increased if the operator does not know how to operate this vehicle properly in different situations and on different types of terrain.

HOW TO AVOID THE HAZARD

Beginners and inexperienced operators should complete a training course.

They should then regularly practice the skills learned during the course as well as the operating techniques described in this Operator's Guide.

For more information about a training course, contact an authorized dealer.

⚠ WARNING

POTENTIAL HAZARD

Improper handling of gasoline.

WHAT CAN HAPPEN

Gasoline can catch and you could be burned.

HOW TO AVOID THE HAZARD

Always shut down the engine while refueling. Do not refuel immediately after the engine has been running and is still very hot. Do not spill gasoline on the exhaust muffler/pipe or engine when refueling. Never refuel while smoking, or while in the vicinity of sparks, open flames, or other sources of ignition such as the pilot lights of clothes dryers or water heaters.

When transporting the ATV in another vehicle, make sure it is placed upright and its fuel cock is in the “OFF” position. Otherwise, gasoline may leak out from the fuel tank or carburetor.

WHAT CAN HAPPEN

Gasoline is poisonous and can cause injuries.

HOW TO AVOID HAZARD

If you swallow some gasoline or breathe a lot of gasoline vapor, or get some gasoline into your eyes, see your doctor right away. If gasoline spills on your skin, wash with water and soap immediately. If gasoline spills on your clothes, change your clothes immediately.

⚠ WARNING

POTENTIAL HAZARD

Improperly operating in reverse.

WHAT CAN HAPPEN

You could hit an obstacle or person behind the vehicle, resulting in serious injury.

HOW TO AVOID THE HAZARD

When you select reverse gear, make sure there are no obstacles or people behind the vehicle. When it is safe to proceed, go slowly. On 2-UP models, take account that the passenger can obstruct your view.

⚠ WARNING

POTENTIAL HAZARD

Starting or running the engine in a closed area.

WHAT CAN HAPPEN

Exhaust smokes are poisonous and may cause people unconsciousness and death within a short time.

HOW TO AVOID THE HAZARD

Always start and operate your ATV in an area with adequate ventilation

⚠ WARNING

POTENTIAL HAZARD

Operating this vehicle through deep or fast flowing water.

WHAT CAN HAPPEN

Tires may float, causing loss of traction and loss of control , which could lead to an accident

HOW TO AVOID THE HAZARD

Never operate this vehicle in fast flowing water or in deep water.

Check water depth and current before you attempt to cross any water. Water should not go above footrests.

Remember that wet brakes may have reduced stopping ability. Test your brakes after leaving water. If necessary, apply those several times to let friction dry out the pads.

⚠ WARNING

POTENTIAL HAZARD

Overloading this vehicle, carrying or towing cargo improperly.

WHAT CAN HAPPEN

Could cause changes in vehicle handling which could lead to an accident.

HOW TO AVOID THE HAZARD

Never exceed the stated load capacity for this vehicle including operator as well as other loads and added accessories.

Cargo should be properly distributed and securely attached.

Reduce speed when carrying cargo or pulling a trailer. Allow greater distance for braking.

Always follow the instructions in this Operator's Guide for carrying cargo or pulling a trailer.

LOCATION OF THE WARNING AND SPECIFICATION LABELS

All warning labels which are on your vehicle are repeated here. Read labels on your vehicle and understand them thoroughly. They contain information which is important for your safety and the safety of anyone else who may operate your vehicle. Therefore, it is very important that all warning labels be on your vehicle in the locations shown. If any label is missing, damaged, or worn, get a replacement from your dealer and install it in the correct position.

NOTE

- **The sample warning labels in this section have part numbers to help you and your dealer obtain the correct replacement.**
- **Refer to the actual vehicle label for model specific data grayed out in the illustration.**

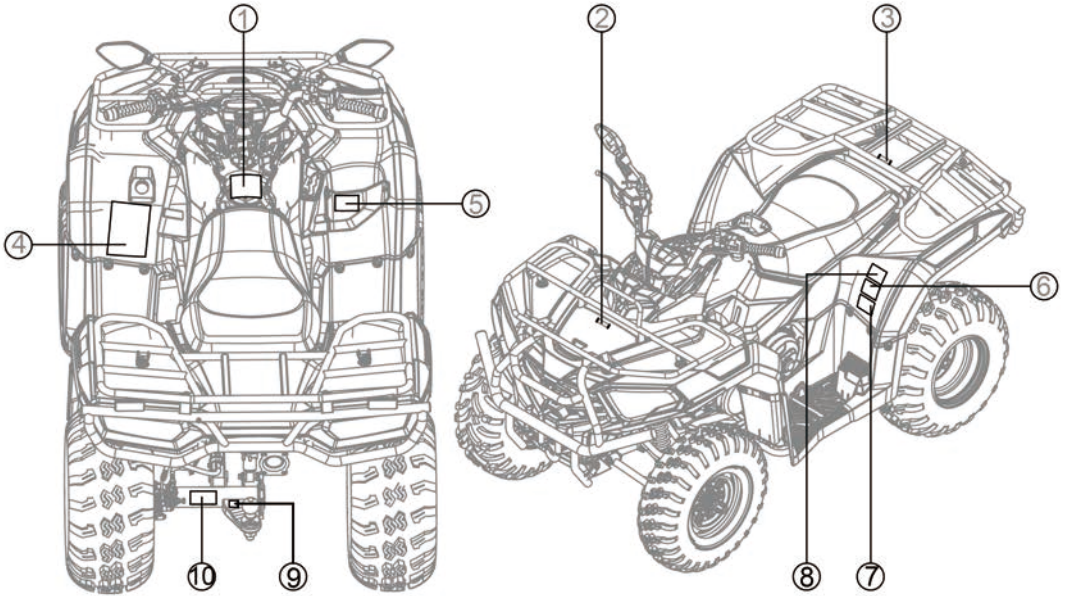
1
2
3
4
5
6
7
8
9
10

①

⚠ WARNING

Operating this ATV if you are under the age of 16 increases your chance of severe injury or death.

NEVER operate this ATV if you are under age 16.

370310831

②

MAX LOAD : 25 kg (55lbs)

370310830

③

MAX LOAD :40 kg (88 lbs)

370310835

④.

⚠ WARNING

Improper ATV use can result in SEVER INJURY or DEATH

ALWAYS USE AN APPROVED HELMET AND PROTECTIVE GEAR

NEVER USE ON PUBLIC ROADS

NEVER CARRY PASSENGERS

NEVER USE WITH DRUGS OR ALCOHOL

NEVER operate:

- without proper training or instruction.
- at speeds too fast for your skills or the conditions.
- on public roads-a collision can occur with another vehicle.
- with a passenger-passengers affect balance and steering and increase risk of losing control.

ALWAYS:

- use proper riding techniques to avoid vehicle overturns on hills and rough terrain and in turns.
- avoid paved surfaces-pavement may seriously affect handling and control.

LOCATE AND READ OWNER'S MANUAL
FOLLOW ALL INSTRUCTIONS AND WARNINGS.

370310828

⑤.

NOTICE

Vehicle must be stopped before shifting transmission.
Shifting while moving may result in transmission damage.

370310834

⑥

⚠ WARNING

NEVER ride as a passenger.

Passengers can cause a loss of control, resulting in **SEVERE INJURY** or **DEATH.**

370310832

⑦.

IMPORTANT DRIVE BELT INFORMATION

Neglect, abuse, or failure to maintain the transmission can result in belt damage and failure.
Inspection of the transmission drive belt is required at least every 2000 km (1200 mi) or year of use whichever comes first, since drive belts wear with normal use.
More frequent inspection is necessary if the vehicle is subjected to hard usage. If excessive belt slippage occurs, do not ride the vehicle until damaged components are repaired, Refer to your Owner's Manual.

370310833

⑧.

⚠ WARNING

Improper tire pressure or overloading can cause loss of control.
Loss of control can result in severe injury or death.

· Cold tire pressure:
  Front: 6.5 psi (45kPa)
  Rear : 6.5 psi (45kPa)
· Maximum weight capacity:331 lbs. (150 kg)

370310829

⑨

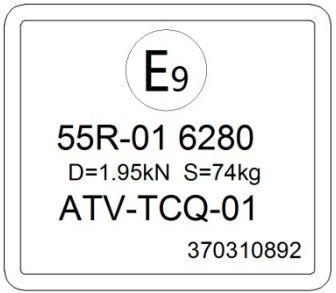
E9
55R-01 6280
D=1.95kN S=74kg
ATV-TCQ-01
370310892

⑩

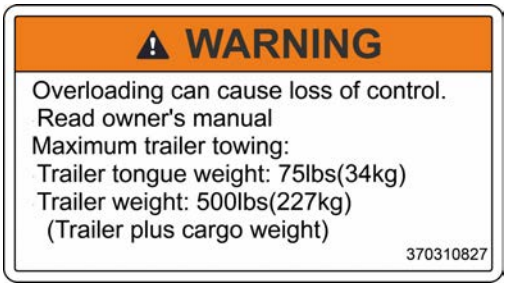
WARNING
Overloading can cause loss of control.
Read owner's manual
Maximum trailer towing:
Trailer tongue weight: 75lbs(34kg)
Trailer weight: 500lbs(227kg)
(Trailer plus cargo weight)
370310827

DESCRIPTION AND VEHICLE IDENTIFICATION

Identification number records

Record the vehicle identification number and engine number in the follow spaces provided for assistance when ordering spare parts from your dealer or for reference in case the ATV is stolen.

1. Vehicle Identification Number:

2. Engine Number

Vehicle identification number

The vehicle identification number is stamped into the frame. This vehicle identification number is used to identify your ATV.

The engine number ① is stamped on the left side of the engine case below the cylinder.

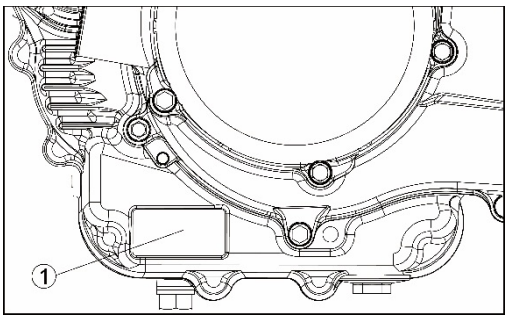

The frame number ① is stamped on the right side frame between the front wheels.

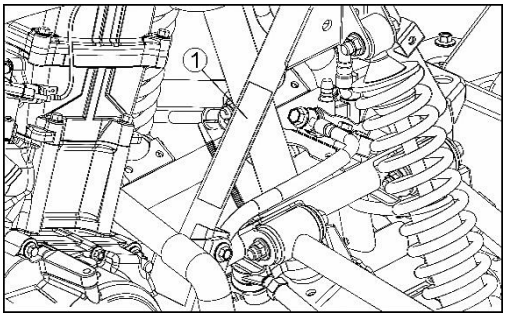

The VIN is on the upper right behind the frame.

(1) If equipped

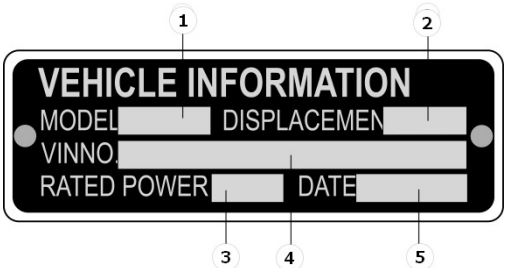

1. Vehicle type 2. Engine displacement
3. Rated power 4. VIN
5. Date of manufacture

（2）If equipped

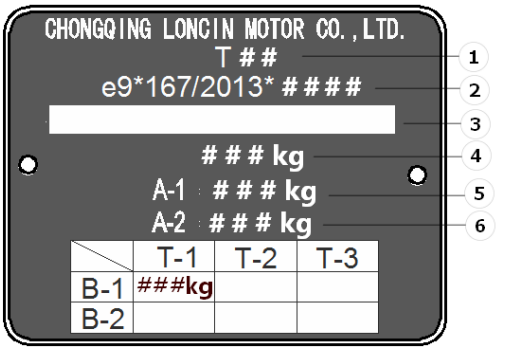

1: Category 2: Type-approval number

3: VIN 4: Permissible maximum laden mass (est.) of the vehicle

5-6: Permissible maximum mass (est.) per axle

B-1: Permissible towable mass on rear coupling point; unbaked trailer

Description of the vehicle parts

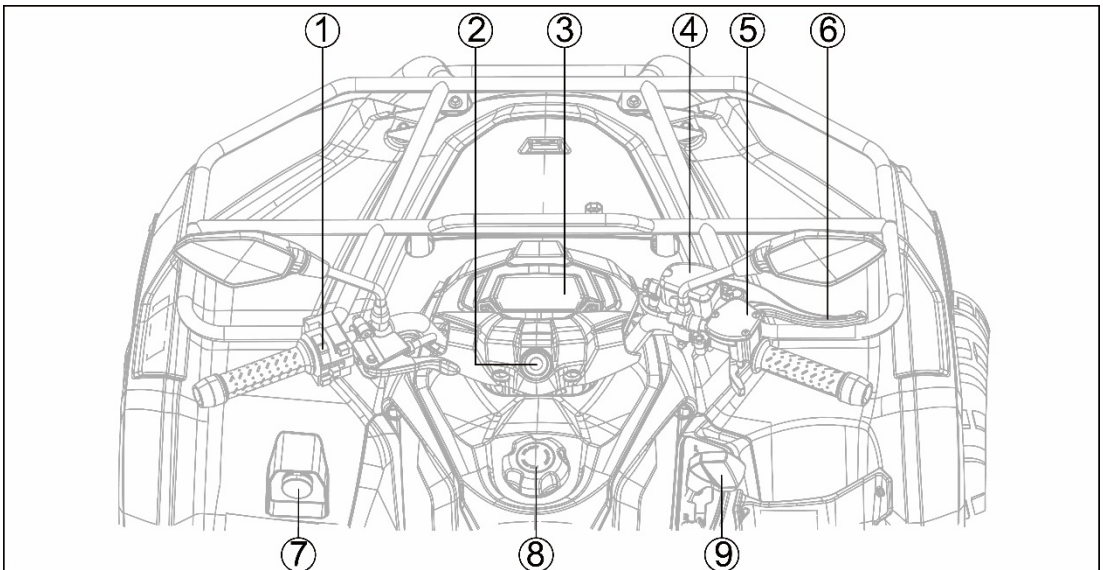

①Handlebar switches
②Main switch
③Multifunction Meter
④Front brake reservoir
⑤Throttle limiter
⑥Front brake lever
⑦Cig Lighter
⑧Fuel Tank Filler Cap
⑨ Drive select lever

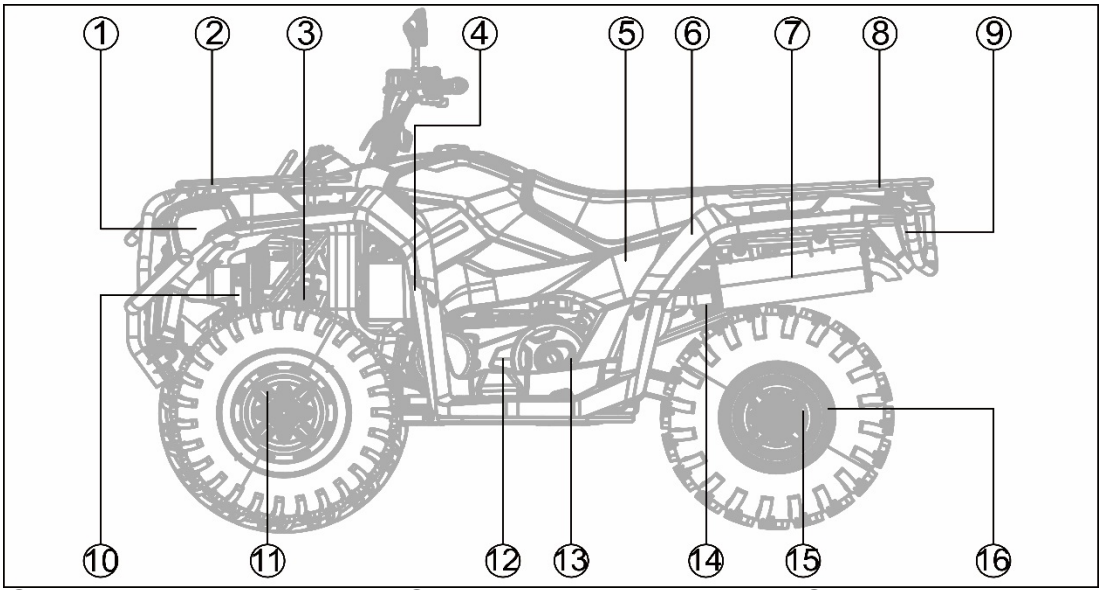

①Headlights
②Front Carrier
③Front Shock Absorbers
④Spark Plug
⑤Air Cleaner
⑥Fuses / Battery
⑦Muffler (Spark Arrester)
⑧Rear Carrier
⑨Brake/Tail Light
⑩Radiator Comp.
⑪Front Disc Brake Calipers
⑫Engine
⑬Belt Drive Transmission (CVT)
⑭Rear Shock Absorber
⑮Rear Disc Brake Caliper
⑯Rear Final Gear Case

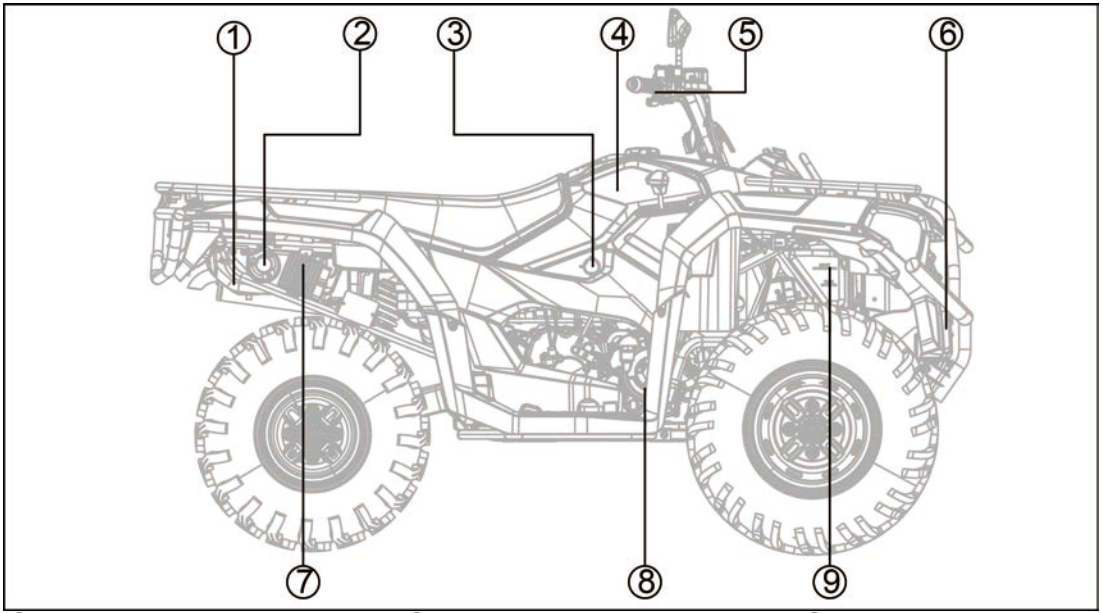

①Tool Kit
②Trailer power socket
（if equipped ）
③Fuel Tap （if equipped ）
④Fuel tank
⑤Controller switch winch
（if equipped ）
⑥Winch （if equipped ）
⑦Rectifier reguT65T654late assy.
⑧Pedals.
⑨Coolant reserve tank

CONTROL FUNCTIONS

WARNING

WARNING indicates a potential hazard that could result in serious injury or death.

Cig Lighter

The power outlet connector is located under the left handlebar.

The ignition switch also operates the power outlet circuit and this vehicle has an accessory fuse (10 A) to protect this circuit.

The connector has a cap. Remove it to connect an electrical accessory.

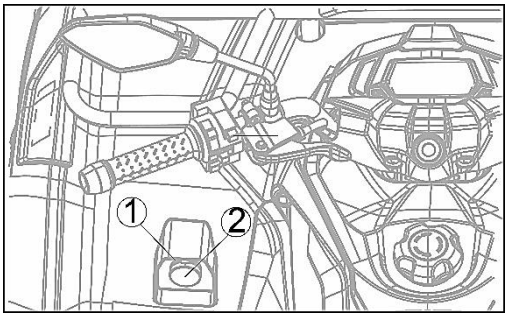

1. Cig Lighter
2. Cap

NOTICE

Do not connect an electrical accessory rated higher than 120 W, or the battery may become discharged.

Main switch

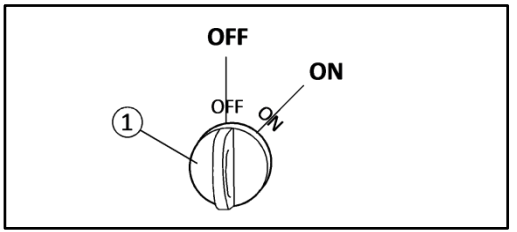

1、Main switch

TIP

The helmet/seat belt indicator light comes on and stays on while the key is turned to "ON".

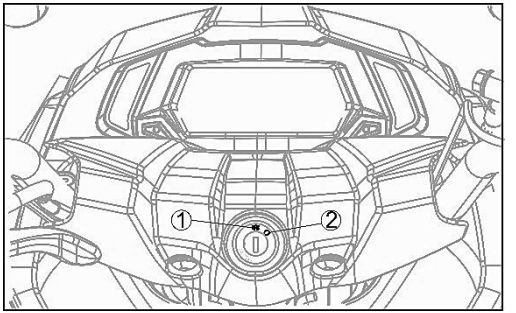

Functions of the respective switch positions are as follows:

1. OFF "":

All electrical circuits are switched off. The key can be removed in this position.

2. ON "":

The engine can be started only at this position.

Multifunction Meter

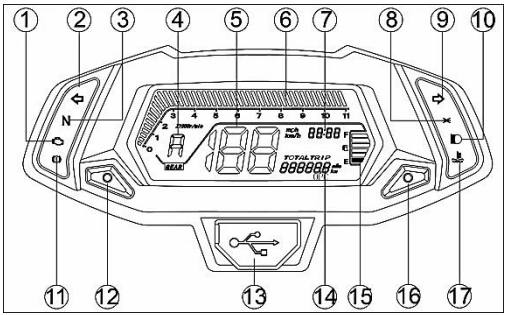

1. EFI fault indicator “”. This indicator displays when a fault occurs in the Electronic Fuel Injection system. Please stop the vehicle and contact your dealer to eliminate the fault.
2. Turning light, LH “”, When switch turns to left turning light position, the indicator is on
3. Neutral indicator light “N”. This indicator displays when the transmission is in neutral
4. Reverse indicator light “R”. Display the current gear position.
5. Speedometer Display the current vehicle speed. (Speedometer section can be toggled to display the vehicle speed in. Kilometers per hour (km/h) or Miles per hour (MPH) by the “ADJ” and “SEL” buttons.
6. Engine Speed. Indicate the engine current RPM, keep the RPM away from the red area
7. Clock. Display the current time. (This dashboard section can be adjusted to correct time by using the “ADJ” and “SEL” button.)

8. Position Light Indicator. This indicator illuminates when the light switch turns to position light.
9. Turning light, RH "⇨ " When switch turns to right turning light position, the indicator is on.
10. High beam indicator. This indicator illuminates when the headlight switch turns to high beam position
11. Brake fluid alarm
12. Left button- mode adjust button.
13. USB waterproof cover
14. Rider Information Center. Rider Information Center. This dashboard section can be toggled using the 'SEL' button to display: 'TOTAL' -The odometer accumulated vehicle distance traveled in miles/kilometers, 'TRIP' - The trip distance traveled, 'H' - The accumulated engine run time, 'V' - Battery voltage, 'Brightness' - Set the dashboard display brightness using the 'ADJ' button. "P" - fault code displays when the vehicle ECU detects a fault.
15. Fuel gauge. Display the fuel level in the fuel tank.
16. Right button -mode select button
17. Coolant Temperature. This dashboard section displays the current coolant temperature, 'C' is low temperature, and 'H' is high temperature. Both over-low and over-high are abnormal. Idle the vehicle to warm the engine when it's too cold, and park the vehicle when it's too

hot to prevent the coolant from boiling. Keep the coolant temperature in a normal range.

Handlebar switches

Push the choke lever towards left to the end， the choke will be close.

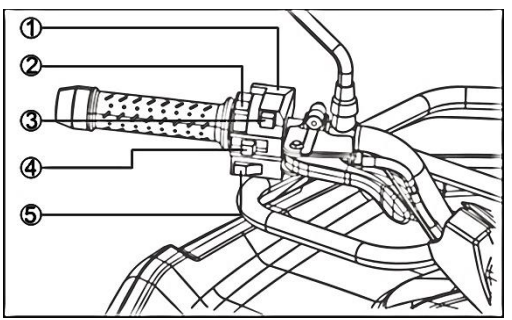

① Start Switch ② Light Switch

③ Engine Stop Switch ④ Turning Light Switch

⑤ Horn Button

Light switch:

Set the switch to “” to turn on the low beam and the taillight.

Set the switch to “” to turn on the high beam and the taillight.

Set the switch to “OFF” to turn off all the lights.

Engine stop switch

When the switch is in the RUN () position, the engine will be operated. When the switch is in OFF () position, the engine will not operate. The engine stop switch controls ignition and can be used at all times to stop the engine, especially in an emergency. The engine will not start when this switch is in “OFF” position.

Start switch

Push ( ) this switch to let the starter motor crank the engine.

NOTE:

If the starter switch is pushed with the main switch “ON” and the engine stop switch “OFF”, the starter motor will be activated but the engine will not start. To start the engine, make sure the engine stop switch at “RUN” position.

Choke lever （if equipped ）

The choke lever on the left handlebar provides a rich mixture for cold starting conditions.

Pull the choke lever all the way to the left to start the engine. Warm the engine up by operating the choke lever and throttle until the idle speed is stable, then push the choke lever all the way back to the right.

NOTE

If the choke is left on (lever to the left) too long after the engine has warmed up, it will cause spark plug fouling and poor fuel economy.

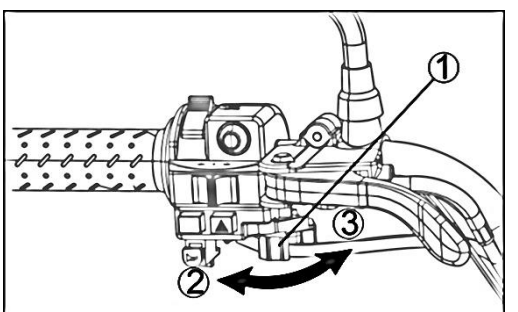

① Choke lever ② ON ③ OFF

Throttle limiter

The vehicle is equipped with a throttle limiter to decrease maximum engine power for an unskilled operator. The limiter functions by restricting the moving distance of the throttle lever.

⚠ WARNING

POTENTIAL HAZARD

Malfunction of throttle.

WHAT CAN HAPPEN

The throttle level could be hard to operate, cause it difficult to speed up or slow down when you need to. This could cause an accident.

HOW TO AVOID THE HAZARD

Always check the operation of the throttle level before you start the engine. If it doesn’t work smoothly, check for the reason. Correct the problem before riding this ATV. Consult your dealer if you cannot find or Solve the problem by yourself.

⚠ WARNING

HAZARD

Operating this ATV without proper instruction.

WHAT CAN HAPPEN

The risk of an accident is greatly increased if the operator does not know how to operate the ATV properly in different situations and on different types of terrain.

HOW TO AVOID THE HAZARD

Beginning and inexperienced operators should complete a certified training course offered by The ATV Safety Institute (ASI).They should then regularly practice the skills learned in the course and the operating techniques described in the Owner's Manual

⚠ WARNING

HAZARD

Operating this ATV at excessive speeds.

WHAT CAN HAPPEN

Increases your chances of losing control of the ATV, which can result in an accident.

HOW TO AVOID THE HAZARD

Always go at a speed that is proper for the terrain, visibility and operating conditions, and your experience.

Loosen the lockout and turn the screw in or out. Turning in decreases the maximum engine power, turning out increases the maximum engine power.

The speed limiter keeps the throttle from fully opening, even when the throttle lever is pushed to the maximum. Screwing in the adjuster limits the maximum engine power available and decreases the maximum speed of the ATV

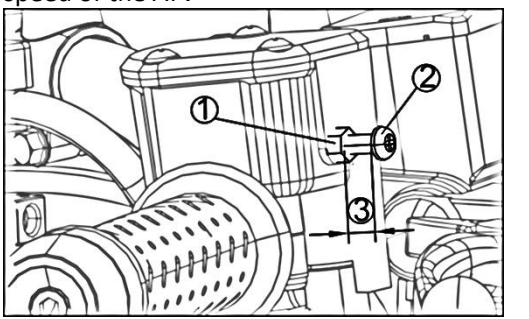

① Locknut

② Screw

③ 13mm (0.51in)

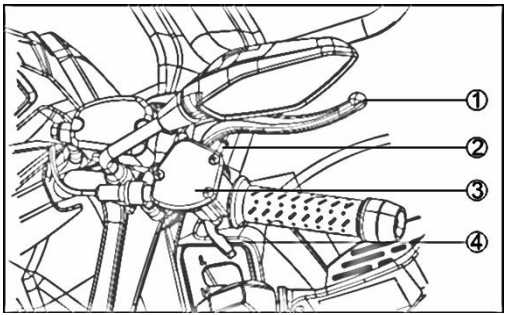

① Brake Lever ② Throttle Adjusting Screw ③ Throttle limiter. ④Throttle Lever

NOTICE

If the throttle limiter is adjusted, verify the changes in throttle in an open, non-traffic area.

Never try to adjust the limiter by racing the engine in neutral or in gear with brake on, or the engine may be damaged.

Speed limiter

There is a screw on throttle box, which is designed to keep the throttle from fully opening; even the throttle lever is pushed to the maximum. Screwing in the adjuster limits the maximum engine power available and decreases the maximum speed of the vehicle. Your ATV was delivered with an adjustable speed limiter. We recommend that all beginners start off with the speed limiter screw turned in to limit the speed while they learn. Once the beginner becomes more familiar with operating the ATV, the screw maybe gradually turned out to increase maximum speed. Adults should decide when to adjust the ATV for more power as the riding skills of their youngster

improve. Once the rider can operate with full skill at top speed permitted by . Adjusting the speed limiter alone.

⚠ WARNING

POTENTIAL HAZARD

Adjust the speed limiter and throttle improper.

WHAT CAN HAPPEN

The throttle cable could be damaged and cause improper throttle operation. You could lose control, have accident or be injured.

HOW TO AVOID THE HAZARD

Do not turn the speed adjuster out more than 20 mm (0.8 in).

Brake Lever

The brake lever is located on the right handlebar. Pull the lever toward handlebar to apply the front brake. Check the free play of front brake lever. The normal free play is between 10 to 20 mm. (0.4 to 0.8 in.) You can adjust the brake lever by turning the adjuster

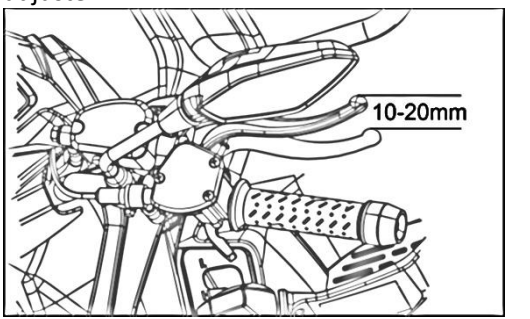

Brake lever has 5 gears to adjust, adjust the brake lever and handle clearance. From the first to the fifth gear the gap gradually becomes smaller

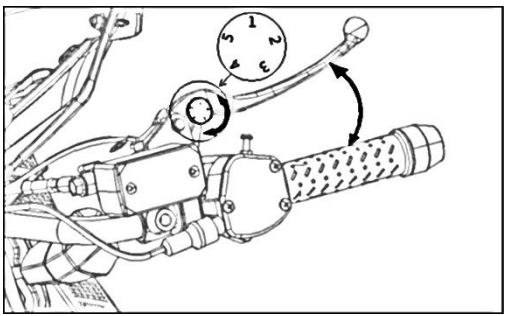

Brake pedal

The brake pedal is located on the right side of the machine. Push down the pedal to apply the rear brake. If the ATV have CBS （Combination Braking System）, Push down the pedal to apply both the front and rear brake.

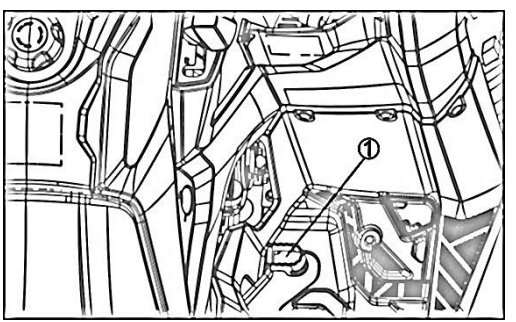

① Brake pedal

Parking brake

The parking brake is located on the left handlebar. Pull the parking brake lever towards left to the end to apply the parking brake. Pull the parking brake lever towards right to the end then the parking brake will release automatically.

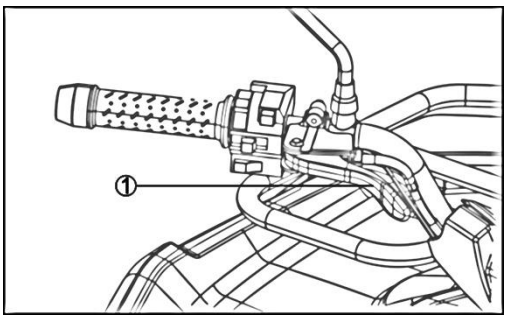

①. Parking brake lever

⚠ WARNING

POTENTIAL HAZARD

Operate the parking brake improperly.

WHAT CAN HAPPEN

The ATV could start moving unexpectedly if the parking brake is not applied before starting the engine. This could cause loss of control or a collision.

The ATV could start moving unexpectedly if the parking brake is not applied before starting the engine. This could cause loss of control or a collision.

If you ride the ATV without releasing the parking brake, it could cause the brake overheat to lose braking performance and cause an accident.

HOW TO AVOID THE HAZARD

- Always set the parking brake before starting the engine.
- Always make sure to release the parking brake before you start to ride.
- Do not change the gear to reverse before the ATV stops completely.

Front and rear carriers

This vehicle is equipped with carriers on the front and rear

⚠ WARNING

HAZARD

Overloading front and rear carriers or carrying cargo improperly.

WHAT CAN HAPPEN

Could cause changes in vehicle handling which could lead to an accident

HOW TO AVOID THE HAZARD

Never exceed the stated load capacity for each carrier. Cargo should be properly distributed and securely attached.

Reduce speed when carrying cargo. Allow greater distance for braking.

Always follow the instructions in your Owner’s Manual for carrying cargo

Maximum load

Front	**25kg (55 lbs)**
Rear	**40kg (88 lbs)**

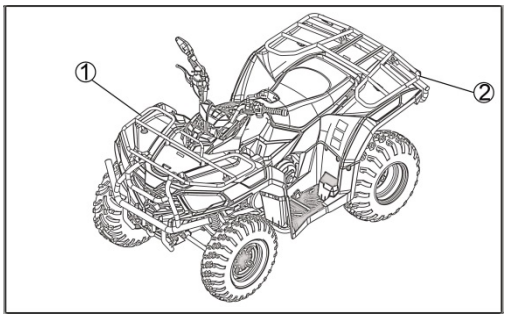

① Front carriers

② Rear carriers

Fuel cock

The fuel cock is below the fuel tank. To switch the fuel cock at three positions:

: Fuel flows to carburetor while the lever is in this position.

● : Fuel will not flow while the lever is in this position.

: Turn the lever to this position if you run out of fuel while riding. The reserve fuel of the fuel tank is applied as soon as possible. Turn the lever to the “ ” position after refueling.

NOTE:

Always turn the lever in “ ● ” position when the engine is not running.

Fuel Tank

Only use gasoline with the recommended octane rating. Avoid filling the tank in the rain or where heavy dust is blowing so that the fuel does not get contaminated.

Never fill the tank completely to the top. As the fuel expands in a warm tank, it may overflow from the vent hose. After refueling, make sure the filler cap is closed securely. It is the torque-limiting type to pervert over-tightening.

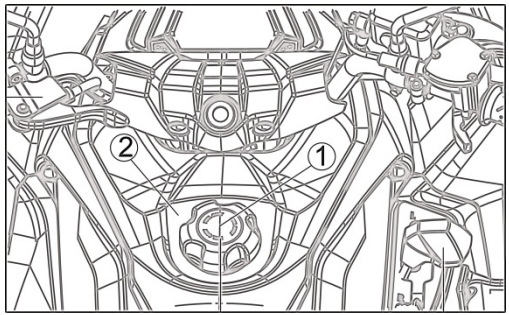

① Fuel tank filler cap

②Fuel tank

⚠ WARNING

HAZARD

Refueling without following proper precautions.

WHAT CAN HAPPEN

Gasoline is extremely flammable and can be explosive under certain conditions.

A fire or explosion can cause severe injury or death.

HOW TO AVOID THE HAZARD

When refueling, do not smoke. Turn the ignition key to "OFF". Make sure the area is well ventilated and free from any source of flame or sparks; this includes any appliance with a pilot light.

Never fill the tank completely to the top! Heat may cause the fuel to expand and overflow through the vent in the tank cap.

After refueling, make sure the fuel tank cap is closed securely.

If gasoline is spilled on the rear fender wipe it off immediately.

⚠ WARNING

POTENTIAL HAZARD

Overfilling the fuel tank could be hazardous.

WHAT CAN HAPPEN

If you overfill the fuel tank, fuel may overflow when it expands. Expanding is due to heat from engine or sun. Overheated fuel could easily catch fire.

Stop adding fuel when the fuel level reaches the bottom of the filler neck.

Improper fueling of the ATV could be hazardous.

Failing to follow safety precautions when refueling could result in a fire or let you to breathe toxic fumes.

HOW TO AVOID THE HAZARD

Refuel in a well-ventilated area. Make sure the engine is off and avoid spilling fuel on a hot engine. Do not smoke, and make sure there are no open flames or sparks in the area. Avoid breathing gasoline vapors. Keep children and pets away when you are refueling the ATV.

Fuel Requirements:

Fuel Type

Use clean, fresh unleaded gasoline with a minimum Antiknock Index of 87. The Antiknock Index is posted on service station pumps in the U.S.A. The octane rating of a gasoline is a measure of its resistance to detonation or "Knocking." The Antiknock Index is an average of the Research Octane Number (RON) and the Motor Octane Number (MON) as shown in the table below.

Octane Rating Method	Minimum Rating
Antiknock Index $\frac{(RON + MON)}{2}$	87

NOTICE

If engine "knocking" or "pinging" occurs, use a different brand of gasoline of a higher octane rating. If this condition is allowed to continue it can lead to severe engine damage.

Gasoline quality is important. Fuels of low quality or not meeting standard industry specifications may result in unsatisfactory performance. Operating problems that result from the use of poor quality or no recommended fuel may not be covered under your warranty.

Fuels Containing Oxygenates

Gasoline frequently contains oxygenates (alcohols and ethers) especially in areas of the U.S. and Canada which are required to

sell such reformulated fuels as part of a strategy to reduce exhaust

The types and volume of fuel oxygenates approved for use in unleaded gasoline by the U.S.

Environmental Protection Agency includes a broad range of alcohols and ethers, but only two components have seen any significant level of commercial use.

Gasoline/Alcohol Blends-Gasoline containing up to 10% ethanol (alcohol produced from agricultural products such as corn), also known as "gasohol" is approved for use.

NOTICE

Avoid using blends of unleaded gasoline and methanol (wood alcohol) whenever possible, and never use "gasohol" containing more than 5% methanol. Fuel system damage and performance problems may result.

Gasoline/Ether Blends- The most common ether is methyl tertiary butyl ether (MTBE). You may use gasoline containing up to 15% MTBE.

NOTICE
Never use gasoline with an octane rating lower than the minimum specified by dealers **Never use "gasohol" with more than 10% ethanol, or more than 5% methanol. Gasoline containing methanol must also be blended with solvents and corrosion inhibitors.** **Certain ingredients of gasoline may cause paint fading or damage. Be extra careful not to spill gasoline or gasoline oxygenates blends during refueling.** **Never store this product with in the fuel system. Before storage it is recommended that you drain all fuel from the fuel tank.**

Seat

To remove the seat, First pull up one side of the seat in the back, then pull up the other side.

To install the seat, insert the projections on the front of the seat into the holder on the rear of the fuel tank, and push down on the seat at the rear when the locks on the rear of the seat aim at the support cushion under the seat.

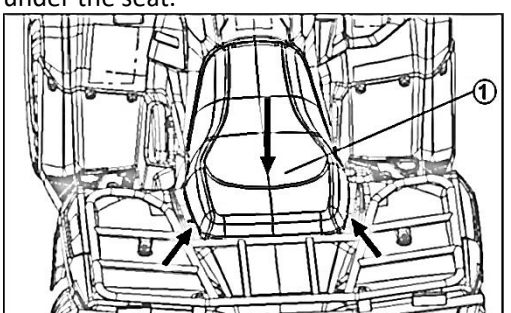

①Seat

NOTE:

Always make sure the seat is securely fitted.

⚠ WARNING

Improperly installing the seat could be hazardous.

Failing to install the seat properly could allow the seat to move and cause the rider to lose control.

Make sure you are in proper position and that the seat is attached securely when you ride.

Drive select lever

The drive select lever is used to shift your machine into the forward, neutral, reverse positions.

NOTE:

Never shift your machine when you still don't stop your ATV, and never press the throttle level when you are shifting your machine. Otherwise the engine can be damaged.

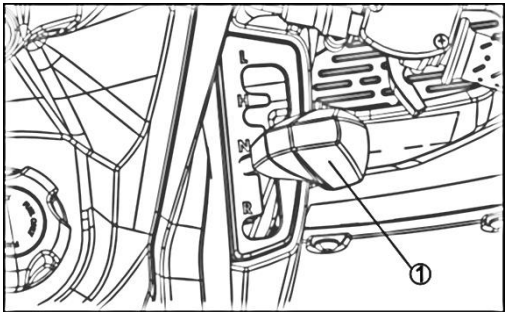

① Drive select lever

L（Low-range）

1． H (High-range)

2． N (Neutral)

3． R (Reverse)

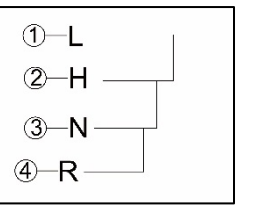

Trailer Power Socket (if equipped)

This vehicle is equipped with trailer power socket, located under the rear cargo rack. The socket wires are configured to this standard as shown in the image provided. An accessory trailer power converter is required for trailers that do not have a connector. Contact your dealer for more information.

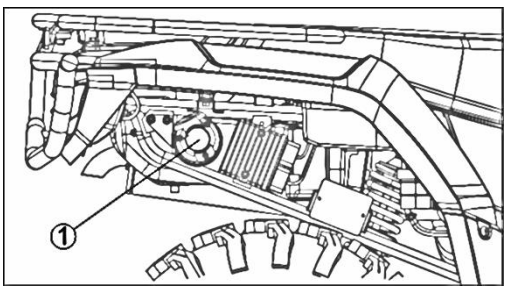

① Trailer Power Socket

PRE- OPERATION CHECKS

Pre-Ride Inspection Check List

What to Do Before Starting the Engine (Key OFF)

ITEMS TO BE INSPECTED	INSPECTION TO PERFORM
Engine oil	Check engine oil level.
Coolant	Check coolant level.
fuel	Check fuel
Brake fluid	Check brake fluid level.
Leaks	Check for any leaks under vehicle
Throttle lever	Activate throttle lever several times to ensure it operates

ITEMS TO BE INSPECTED	INSPECTION TO PERFORM
Brake lock	Apply brake lock and check if it operates properly
Tires	Check tire pressure and condition. Refer to SPECIFICATIONS and adjust according to load.
Wheels	Check wheels for damage and for abnormal play, and make sure that lug nuts are tightened. Titan wheel deadlock bolts (if equipped). Refer to WHEELS AND TIRES in MAINTENANCE PROCEDURES for torque specification.
Radiator	Check cleanliness of the radiator
Drive shaft boots	Check drive shaft boots and protectors condition
Seat(s)	Check if operator seat is in place and properly latched
	Check if passenger seat is in place and properly latched (2-UP Models)
	Check the passenger backrest and grab handles condition (2-UP Models)

ITEMS TO BE INSPECTED	INSPECTION TO PERFORM
Cargo	If you transport a cargo, respect the load capacity. Refer to LOADING THE CARGO RACKS Ensure cargo is properly secured to the racks
	If you are pulling a trailer or another equipment: – Check hitch and trailer ball condition – Respect the tongue capacity and towing capacity as indicated on the label affixed to the hitch or refer to SPECIFICATIONS – Ensure trailer is properly secured to hitch.
Storage compartment	Check if rear storage compartment is properly latched
Chassis and suspension	Check underneath vehicle for any debris on chassis or suspension and clean them properly
Engine air filter	Inspect and clean engine air filter
CVT air filter	Inspect and clean CVT air filter

What to Do Before Starting the Engine (Key ON)

ITEMS TO BE INSPECTED	INSPECTION TO PERFORM
Multifunction gauge	Check operation of indicator lamps in multifunction gauge (during first few seconds of key ON)
	Check for messages on multifunction gauge
Lights	Check operation and cleanliness of headlights and taillight
	Check operation of low and high beams
	Check operation of brake light
	Check operation and cleanliness of turn signal lights
	Check operation of hazard lights
Horn	Check operation of the horn
Fuel level	Check the fuel level

What to do after the Engine is started

ITEMS TO BE INSPECTED	INSPECTION TO PERFORM
Steering	Check if steering operates freely by completely turning it from side to side
Shift lever	Check operation of shift lever (R, N, H and L)
Brakes	Drive forward slowly a few feet and apply brake lever and brake pedal individually. The brakes must fully apply. Lever and pedal must fully return when released
Engine stop switch	Check that the engine stop switch is working properly
Ignition switch	Check if ignition switch is working properly by restarting and stopping the engine

⚠ WARNING

POTENTIAL HAZARD

Failure to check the ATV before operating.

Failure to maintain the ATV properly.

WHAT CAN HAPPEN

It could cause an accident or equipment damage.

HOW TO AVOID THE HAZARD

Always check your ATV carefully each time before your use it to be sure the ATV is in safe operation condition.

Always follow inspection and maintenance procedure as shown in the owner’s manual

Never allow a passenger on an ATV that is not designed for carrying a passenger

⚠ WARNING

POTENTIAL HAZARD

Improperly operating brakes while riding.

WHAT CAN HAPPEN

The braking ability could lose and cause an accident

HOW TO AVOID THE HAZARD

Always check the brakes every time before you start to ride. Do not ride the ATV if you find there is any problem with the brakes. Find your dealer to inspect it if you cannot correct the problem by yourself according to the adjustment procedures provided in this manual.

Brakes

1. Brake operation

Test the brakes at slow speed after starting to make sure they are working properly. If any of the brakes does not provide proper function, inspect the brake for wear and the level of the brakes fluid.

2. Brake pedal and brake levers

Check the correct free play in the brake pedal and brake levers. Adjust it if the free play is incorrect.

Fuel

Always fill regular unleaded gasoline to your ATV. Do not use leaded gasoline; it will cause damage to internal engine parts.

If knocking or pinging occurs, use a different brand of gasoline or premium unleaded fuel.

⚠ WARNING

Do not overfill the fuel tank. Be careful not to spill fuel, especially on the engine or exhaust pipe. Make sure the fuel tank cap is closed securely.

Do not refuel right after the engine has been running and is still very hot.

Engine Oil

Always fill engine oil according to ambient temperature recommended as follows:

Ambient temperature / recommended oil:

5℃~45℃(40℉~120℉) / SAE15W40

-10℃~35℃(10℉~100℉) / SAE10W30

-20℃~0℃(0℉~30℉) / SAE 5W30

-30℃~0℃(-20℉~0℉) / SAE 0W20

Make sure the engine oil is at specified level.

Add oil as necessary:

The specified level of the crankcase engine oil: 1600ml;

Recommended oil:

SAE80W-90

The specified level of the transmission box engine oil: 600ml.

Switches

Check the operation of engine stop switch, starter switch, main switch and fuel cock. Repair as necessary for proper operation.

Fittings and Fasteners

Always check the tightness of chassis before riding this ATV. Take the ATV to your dealer or refer to this manual for correct tightening torque.

Tires

The tire gauge is equipped with this ATV and located in the tool bag under the seat. Measure tire pressure by the tire gauge and set the front and rear tires pressure to 45kPa (6.5psi).

⚠ WARNING

POTENTIAL HAZARD

Operating this ATV with Improper tires, or with improper or uneven tire pressure.

WHAT CAN HAPPEN

Operating this ATV with Improper tires or with improper or uneven tire pressure could cause loss of control and an accident.

HOW TO AVOID THE HAZARD

1. The specific tire pressure is shown on the tire.
2. Always use size 22×7-10 or24×8-12or 24×8-10 as front tires (if equipped).
3. Always use size 22 x 10 - 10 or 24× 10-12 or24×10-10 as front tires (if equipped).

Measuring the tire pressure

Use the low-pressure tire gauge.

NOTE :

The low-pressure tire gauge is included as standard equipment. Make two measurements of the tire pressure and use the second reading. Dust or dirt in the gauge could cause the first reading to be incorrect.

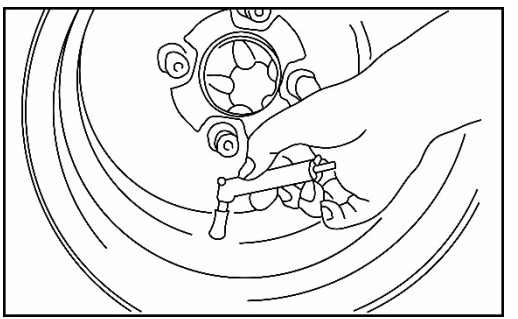

Tire wear limit

When the tire groove decreases to 3 mm (0.12 in) due to wear, replace the tire.

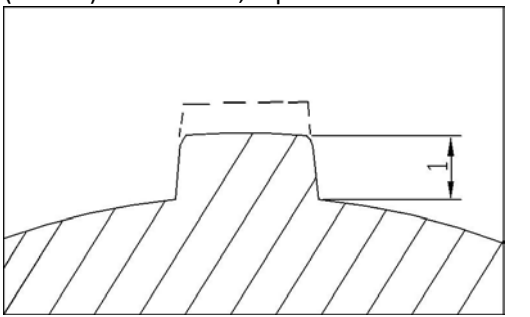

1、Tire wear limit

OPERATION

⚠ WARNING

Indicates a potential hazard that could result in serious injury or death.

⚠ WARNING

POTENTIAL HAZARD

Operating ATV without being familiar with all controls.

WHAT CAN HAPPEN

Loss of control, which could cause an accident or injury.

HOW TO AVOID THE HAZARD

Read this manual carefully. If you don't understand any control or function, ask your dealer.

Starting a cold engine

1. Set the parking brake.
2. Turn the fuel cock to "ON"
3. Turn the engine stop switch to "RUN"
4. Press down the start button to "ON"
5. Shift the transmission gear to neutral.
6. Push the choke lever towards left to the end. (If equipped)
7. Complete close the throttle lever.
8. Push the start switch to crank the engine
9. Push the throttle lever to the middle position (warming up position.) Until the engine runs then release the start button. If the engine fails to start,

release the start button, and then push it again. Each cranking should not be more than 5 seconds; the continuous cranking times should not be more than 3 times.

10. Keep warming up the engine for 5 min. then push the choke lever towards right to the terminal.

Moving Off

1. Move the shift lever into the "H"(High) or "L" (Low) position.
2. Release the parking brake.
3. Gradually increase engine speed by pushing the throttle lever forward.

NOTE:

Practice starting and stopping (using the brakes) until you are familiar with the controls.

To decelerate:

1. Release the throttle gradually.
2. Apply the brakes smoothly and evenly.

Engine break-in

The most important period in the life of your engine is between 0 and 20 hours. Please read the following information very carefully.

- Do not put an excessive load on the ATV for first several hours of running.
- Never continuous operation above half throttle.
- Cool off the engine for ten minutes after every hour of operation.
- Vary the speed of the engine from time to time.

Parking

When parking, stop the engine and shift into neutral. Turn the fuel cock to “ ● ” position and apply the parking brake. Never parking on hills or other inclines.

Loading

As originally equipped, this ATV can carry cargo; cargo can change the stability and handling of an ATV. You must use common sense and good judgment when carrying cargo.

⚠ WARNING

Overloading this ATV or carrying or towing cargo could cause changes in vehicle handling which could lead to an accident. Never exceed the stated loading capacity for this ATV.

Maximum Weight Capacity

Weight of operator and baggage or cargo must not exceed150 kg (331lb).

⚠ WARNING

HAZARD

Operating this ATV with improper modifications.

WHAT CAN HAPPEN

Improper installation of accessories or modification of this vehicle may cause changes in handling which could lead to an accident.

HOW TO AVOID THE HAZARD

Never modify this ATV through improper installation or use of accessories. All parts and accessories added to this vehicle should be genuine dealer or equivalent components designed for use on this ATV and should be installed and used according to instructions. If you have questions, consult an authorized ATV dealer.

⚠ WARNING

HAZARD

Overloading this ATV or carrying or towing cargo improperly.

WHAT CAN HAPPEN

Could cause changes in vehicle handling which could lead to an accident.

HOW TO AVOID THE HAZARD

Never exceed the stated load capacity for this ATV. Cargo should be properly distributed and securely attached. Reduce speed when carrying cargo or pulling a trailer. Allow greater distance for braking. Always follow the instructions provided in this section for carrying cargo or pulling a trailer.

With the exception of genuine dealer Parts and Accessories, dealer has no control over the design or application of accessories. In some cases, improper installation or use of accessories, or vehicle modifications, will void the vehicle warranty. In selecting and using accessories, and in loading the vehicle, you are personally responsible for your own safety and the safety of other persons involved.

Because an all-terrain vehicle is sensitive to increases in weight, changes in weight distribution, and aerodynamic forces, you must take extreme care in carrying cargo and/or in the fitting of accessories. The following general guidelines have been prepared to help you make your determinations.

- When adding cargo and pulling a trailer reduce speed. Shift transmission to “L” (Low) range. Braking distance is increased. Use extreme caution when climbing and descending hills, and traversing slopes. Adding cargo and pulling a trailer can make the vehicle difficult to steer and affect vehicle handling in an unpredictable manner.
- All cargo should be carried as low as possible to reduce the effect on the vehicle’s center of gravity. Cargo weight should also be equally distributed from side to side. Place cargo to the rear of a front carrier and to the front of a rear carrier. This helps maintain the stability of the vehicle by centralizing the weight. Do not allow cargo to extend beyond the edges of the carriers.
- Do not place more than 25kg (55 lb) on the front carrier, not more than 40 kg (88 lb) on the rear exceed the carrier manufacturer’s stated load capacity. In any case, never exceed the limits stated above. Try to maintain front to rear balance by carrying one and a half times as much weight on the rear carrier as on the front carrier.

- Cargo should be securely attached. Make sure the cargo will not move around while you are riding. Recheck cargo security as often as possible (not while the vehicle is in motion) and adjust as necessary.
- Do not carry heavy or bulky items even on a cargo carrier. They are designed for light items, and overloading can affect handling due to changes in weight distribution and aerodynamic forces.
- Do not install accessories or carry cargo that impairs the performance of the vehicle. Make sure that you have not adversely affected any lighting component, ground clearance, brake or control operation, wheel movement, or any other aspect of the vehicle's operation.
- Always subtract trailer tongue weight from the Maximum Weight capacity. Refer to the LOCATION OF THE WARNING AND SPECIFICATION LABELS chapter for details on the trailer hitch bracket.
- Weight attached to the handlebar will increase the mass of the steering assembly and can result in an unsafe riding condition.

- Windshields, trunk boxes, and other large items have the capability of adversely affecting stability and handling of the vehicle, because of their weight and the aerodynamic forces acting on these surfaces while the vehicle is in operation. Poorly designed or installed items can result in an unsafe riding condition.
- Never ride with passengers on the carriers. This ATV is not designed for carrying passengers on the carriers.

RIDING YOUR ATV

⚠ WARNING

Indicates a potential hazard that could result in serious injury or death.

Operator safety

- Wet brakes may have reduced stopping ability. Test your brakes after leaving water. If necessary, apply them lightly several times while driving slowly to allow friction to dry out the pads.
- Always check for obstacles or people behind the ATV before operating in reverse. When it's safe to proceed in reverse, move slowly and avoid turning at sharp angles.
- Always use the size and type of tires specified for your ATV, and always maintain proper tire pressure.
- Never modify an ATV through improper installation or use of accessories.
- Never exceed the stated load capacity for your ATV. Cargo must be properly distributed and securely attached. Reduce speed and follow the instructions in this manual for carrying cargo or towing. Allow a greater distance for braking.
- Always remove the ignition key when the vehicle is not in use to prevent

unauthorized use or accidental starting.

- Children or pets shall not be carried on the racks.
- Never touch running parts, such as wheels, drive shaft, etc.

Know your ATV before riding

This ATV is for recreation use. This section, riding your ATV, provides general ATV riding instructions for recreational riding. The skills and techniques described in this section are appropriate for all types of riding. Riding this ATV requires special skills. Take the time to learn the basic techniques well before attempting more difficult maneuvers.

For your safety, be sure you have read this Owner's Manual completely and understand the operation of the controls before you begin to ride. Read all caution and warning labels on your ATV and pay particular attention to the safety information.

Ride with care and judgment

Get training if you are inexperienced.

Beginners should get training from a certified instructor. Start at slow speeds first to be familiar with this ATV even if you are an experienced rider. Do not operate at maximum performance until you are totally familiar with the ATV's handling and performance characteristics.
Take the time to learn the basic techniques

well before attempting more difficult maneuvers.

Never allow children under 16 years old to ride this ATV.

This ATV is designed to carry the operator only, never carry a passenger.

The long seat is to allow the operator to shift position as needed during operation. It is not a design for carrying passenger.

Apparel

Always wear clothing suited to the type of riding. ATV riding requires special protective clothing for comfort and to reduce the chance of injury:

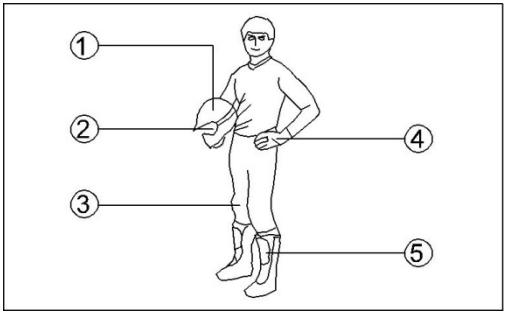

①Helmet

Your helmet is the most important piece of protective gear for safe riding. An approved helmet can prevent a severe head injury

②Eye protection

Do not depend on sunglasses for proper eye protection. A pair of goggles or a helmet face shield offers the best protection for your eyes. They should be kept clean and be a shatterproof design

③Clothing

Always wear long sleeves and long pants to protect arms and legs. Riding pants with kneepads and a jersey with shoulder pads provide the best protection.

④Gloves

Off-road style gloves with knuckle pads are the best for comfort and protection.

⑤Boots

The best footwear is a pair of strong over-the-calf boots with heels, like motto-cross boots.

Do not operate after consuming alcohol or drugs.

Operator’s performance capability is reduced by the influence of alcohol or drugs.

⚠ WARNING

POTENTIAL HAZARD

Operating the ATV after consuming alcohol or drugs

WHAT CAN HAPPEN

Consumption of alcohol and/or drugs could seriously affect operator judgment. Reaction time may be slower and operator balance and perception could be affected. Consumption of alcohol and/or drugs before or while operating an ATV could result in an accident causing severe injury or death.

HOW TO AVOID THE HAZARD

Never consume alcohol or drugs before or while operating an ATV

Pre-operation checks

Always perform the pre-operation checks listed before riding for safety and proper care of your ATV.

Do not operate at speeds too fast for your skills or the conditions.

⚠ WARNING

POTENTIAL HAZARD

Operating this ATV at speeds too fast for your sills or the conditions.

WHAT CAN HAPPEN

Increases your chances of losing control of the ATV, which can result in an accident.

HOW TO AVOID THE HAZARD

Always go at a speed that is proper for the terrain, visibility and operating conditions, and your experience.

Loading and accessories

Use extra caution when riding the ATV with additional loads, such as accessories or cargo. The ATV handling may be adversely affected. Reduce your speed when adding additional loads.

Maximum permissible towable trailer mass: 227 kg(500lb)

⚠ WARNING

POTENTIAL HAZARD

Operating this ATV or carrying or towing cargo improperly.

WHAT CAN HAPPEN

Could cause changes in ATV handing which could lead to an accident.

HOW TO AVOID THE HAZARD

Never exceed the stated load capacity for this ATV.

Cargo should be properly distributed and securely attached.

Reduce speed when carrying cargo or pulling a trailer. Allow greater distance for braking.

Always follow the instructions in your Owner’s Manual for carrying cargo or pulling a trailer.

During operation

Always keep your feet on the footboards during operation. Otherwise your feet may contact the wheel and could cause injury. Avoid wheelies and jumping. You may lose control of the ATV or overturn.

⚠ WARNING

POTENTIAL HAZARD

Attempting wheelies, jumps, and other stunts.

WHAT CAN HAPPEN

Increases the chance of an accident, including an overturn.

HOW TO AVOID THE HAZARD

Never attempt stunts, such as wheelies or jumps.

Don’t try to show off.

Exhaust system

The exhaust system on the ATV is very hot during and following operation. Never touch the exhaust system. Park the ATV in a place where pedestrians or children are not likely to touch it.

⚠ WARNING

POTENTIAL HAZARD

Hot exhaust system.

WHAT CAN HAPPEN

Dry grass or brush or other combustible material accumulated around the engine area could catch fire.

Someone touching the exhaust system during or after operation could be burned.

HOW TO AVOID THE HAZARD

Do not operate, idle, or park the ATV in dry grass or other dry ground cover.

Keep the engine area free of dry grass, brush, or other combustible, material.

Do not touch the hot exhaust system.

Do not park the ATV in a place where others might be likely to touch it.

Be careful where you ride

- This ATV is designed for off-road use only. Riding on paved surfaces can cause loss of control. Do not ride on any public road, street, or highway. Riding on public roads can result in collisions with other vehicles.

⚠ WARNING

POTENTIAL HAZARD

Operating this ATV on public streets, roads or highways.

WHAT CAN HAPPEN

You can collide with another vehicle.

HOW TO AVOID THE HAZARD

Never operate this ATV on any public street, road or highway, even dirt or gravel one. In many states it is illegal to operate ATVs on public streets, roads and highways.

- Know the terrain where you ride. Ride cautiously in unfamiliar areas. Stay alert for roots, holes or rocks in the terrain, and other hidden hazards which may cause the ATV to upset.

⚠ WARNING

POTENTIAL HAZARD

Failure to use extra care when operating this ATV on unfamiliar terrain.

WHAT CAN HAPPEN

You can come upon hidden rocks, bumps, or holes, without enough time to react. Could result in the ATV overturning or going out of control.

HOW TO AVOID THE HAZARD

Go slowly and be extra careful when operating on unfamiliar terrain. Always be alert to changing terrain conditions when operating the ATV.

⚠ WARNING

POTENTIAL HAZARD

Failure to use extra care when operating on excessively rough, slippery or loose terrain.

WHAT CAN HAPPEN

Could cause loss of traction or ATV control, which could result in an accident, including an overturn.

HOW TO AVOID THE HAZARD

Do not operate on excessively rough, slippery or loose terrain until you have learned and practiced the skills necessary to control the ATV on such terrain. Always be especially cautious on these kinds of terrain.

- When riding in an area where you might not easily be seen, such as desert terrain, mount a caution flag on the ATV.

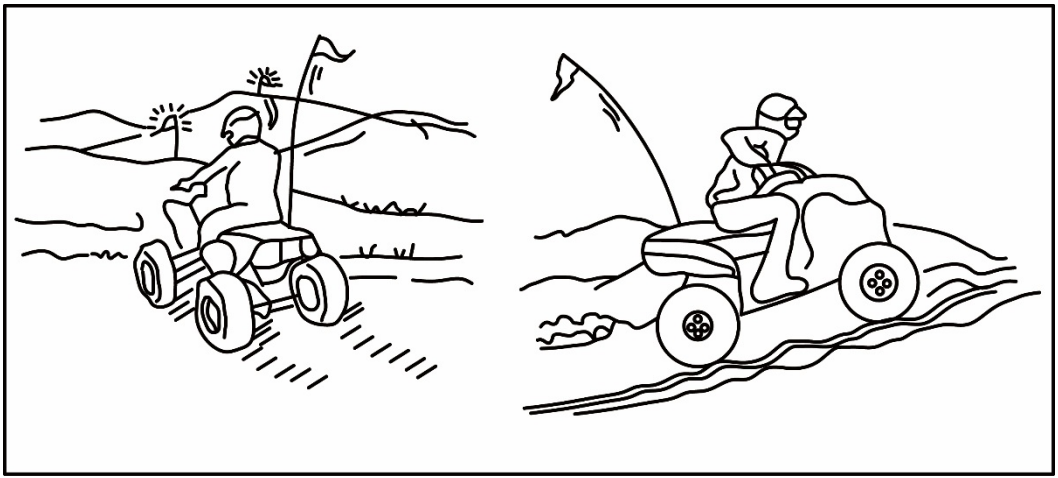

- Do not ride on private property without getting permission.

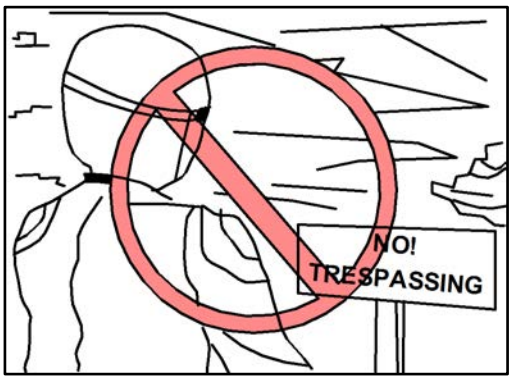

- Select a large, flat area off-road to become familiar with your ATV. Make sure that this area is free of obstacles and other riders. You should practice control of the throttle, brakes, shifting procedures, and turning techniques in this area before trying more difficult terrain. Always avoid riding on paved surfaces: the ATV is designed for off-road use only, and handling maneuvers are more difficult to perform on pavement.
- Set the parking brake and start the engine. Once it has warmed up you are ready to begin riding your ATV. Remember that the engine and exhaust pipe will be hot when riding and afterwards; do not allow skin or clothing to come in contact with these components.

Turning you ATV

To achieve maximum traction while riding off- Road, the two rear wheels are mounted solidly on one axle and turn together at the same speed. Therefore, unless the wheel on the inside of the turn is allowed to slip or lose some traction, the ATV will resist turning. A special turning technique must be used to allow the ATV to make turns quickly and easily. It is essential that this skill be learned first at low speed.

⚠ WARNING

POTENTIAL HAZARD

Turning improperly.

WHAT CAN HAPPEN

The ATV could go out of control, causing a collision or overturn.

HOW TO AVOID THE HAZARD

Always follow proper procedures for turning as described in this Owner's Manual. Practice turning at low speeds before attempting to turn at faster speeds. Do not turn at speeds too fast for your skills or the conditions.

As you approach a curve, slow down and begin to turn the handlebars in the desired direction. As you do so, put your weight on the footboard to the outside of the turn (opposite your desired direction) and lean your upper body into the turn. Use the throttle to maintain an even speed through the turn. This maneuver will let the wheel on the inside of the turn slip slightly, allowing the ATV to make the turn properly.

This procedure should be practiced at slow speed many times in a large off-road area with no obstacles. If an incorrect technique is used, your ATV may continue to go straight. If the ATV doesn't turn, come to a stop and then practice the procedure again. If the riding surface is slippery or loose, it may help to position more of your weight over the front wheels by moving forward on the seat.

Once you have learned this technique, you should be able to perform it at higher speeds or in tighter curves.

Improper riding procedures such as abrupt throttle changes, excessive braking, incorrect body movements, or too much speed for the sharpness of the turn may cause the ATV to tip. If the ATV begins to tip over to the outside while negotiating a turn, lean more to the inside. It may also be necessary to gradually let off on the throttle and steer to the outside of the turn to avoid tipping over.

Remember: Avoid higher speeds until

you are thoroughly familiar with the operation of your ATV.

Climbing uphill

Use proper riding skill to avoid vehicle overturns on hills. Be sure that you can maneuver your ATV well on flat ground before attempting any incline and then practice riding first on gentle slopes. Try more difficult climbs only after you have learned more skills. In all cases avoid inclines with slippery or loose surfaces, or obstacles that might cause you to lose control. It is important when you climbing a hill to make sure that your weight is transferred forward on the ATV. This can be accomplished by leaning forward and, on steeper inclines, standing on the footboards and leaning forward over the handlebars.

If you are climbing a hill and you find that you have not properly judged your ability to make it to the top, you should turn the ATV around while you still have forward motion (provided you have the room to do so) and descend the hill.

If your ATV has stalled or stopped and you believe you can continue up the hill, restart carefully to make sure you do not lift the front wheels which could cause you to lose control. If you are unable to continue up the hill, dismount the ATV on the uphill side. Physically turn the ATV around and then go downhill. If you start to roll backwards,

DO NOT use the rear brake to stop or try to put the ATV in gear. The ATV could easily tip over backwards. Instead, dismount the ATV immediately on the uphill side.

⚠ WARNING

POTENTIAL HAZARD

Improperly crossing hills or turning on hills.

WHAT CAN HAPPEN

Could cause loss of control or cause the ATV to overturn.

HOW TO AVOID THE HAZARD

Never attempt to turn the ATV around on any hill until you have mastered the turning technique as described in the Owner's Manual on level ground.

Be very careful when turning on any hill.

Avoid crossing the side of a steep hill if possible.

When crossing the side of a hill:

Always follow proper procedures as described in the Owner's Manual.

Avoid hills with excessively slippery or loose surfaces.

Shift your weight to the uphill side of the ATV.

⚠ WARNING

POTENTIAL HAZARD

Stalling rolling backwards or improperly dismounting while climbing a hill.

WHAT CAN HAPPEN

Could result in the ATV overturning.

HOW TO AVOID THE HAZARD

Use the proper gear and maintain a steady speed when climbing a hill.

If you lose all forward speed:

Keep weight uphill.

Apply the brakes.

Lock the parking brake after you are stopped.

If you begin rolling backwards:

Keep weight uphill.

Never apply the rear brake while rolling backwards.

Apply the front brake.

When fully stopped, apply the rear brake as well, and then lock the parking brake.

Dismount on uphill side or to a side if pointed straight uphill. Turn the ATV around and remount, following the procedure described in the Owner’s Manual

Riding downhill

When riding your ATV downhill, shift your weight as far to the rear and uphill side of the ATV as possible. Move back on the seat and sit with your arms straight. Choose a low gear which will allow the engine compression to do most of the braking for you. Wrong braking may lead to a loss of traction.

Use caution while descending a hill with loose or slippery surfaces. Braking ability and traction may be adversely affected by these surfaces. Wrong braking may also cause a loss of traction If possible, ride your ATV straight downhill. Avoid sharp angles which could cause the ATV to tip or roll over. Carefully choose your path and ride no faster than you will be able to react to obstacles which may appear.

⚠ WARNING

POTENTIAL HAZARD

Going down a hill improperly.

WHAT CAN HAPPEN

Could cause loss of control or cause the ATV to overturn.

HOW TO AVOID THE HAZARD

Always follow proper procedures for going down hills as described in this Owner's Manual.

Note: a special technique is required when braking as you go down a hill.

Always check the terrain carefully before you start down any hill.

Shift your weight backward.

Never go down a hill at high speed.

Avoid going down a hill at an angle that would cause the ATV to lean sharply to one side. Go straight down the hill where possible.

Crossing a slope

Crossing a sloping surface on your ATV requires you to properly position your weight to keep proper balance. Make sure that you have learned the basic riding skills on flat ground before attempting to traverse a sloping surface. Avoid slopes with slippery surfaces or rough terrain that may disturb your balance.

As you travel across a slope, lean your body in the uphill direction. It may be necessary to correct the steering when riding on loose surfaces by pointing the front wheels slightly uphill. When riding on slopes are sure not to make sharp turns either up or down hill.

If your ATV does begin to tip over, gradually steer in the downhill direction of there are no obstacles in your path. As you regain proper balance, gradually steer again in the direction you wish to travel.

⚠ WARNING

POTENTIAL HAZARD

Improperly crossing hills or turning on hills

WHAT CAN HAPPEN

Could cause loss of control or cause the ATV to overturn.

HOW TO AVOID THE HAZARD

Never attempt to turn the ATV around on any hill until you have mastered the turning technique as described in the Owner's Manual. On level ground.

Be very careful when turning on any hill. Avoid crossing the side of a steep hill if possible.

When crossing the side of a hill:

Always follow proper procedures as described in the Owner's Manual.

Avoid hills with excessively slippery or loose surfaces.

Shift your weight to the uphill side of the ATV.

Crossing through shallow water

The ATV can be used to cross slow moving, shallow water of up to a maximum of 35cm (14 inches) in depth. Before entering the water, choose your path cautiously. Enter where there is no sharp drop off, and avoid rocks or other obstacles which may be slippery or upset the ATV. Ride slowly and carefully

Test your brakes after leaving the water. Do not continue to ride your ATV without verifying that you have regained proper braking ability.

CAUTION

After riding your ATV in water, be sure to drain the trapped water. Wash the ATV in fresh water if it has been operated in salt water or muddy conditions.

⚠ WARNING

POTENTIAL HAZARD

Operating this ATV through deep or fast flowing water.

WHAT CAN HAPPEN

Tires may float, causing loss of traction and loss of control, which could lead to an accident.

HOW TO AVOID THE HAZARD

Never operate this ATV in fast flowing water or in water deeper than that specified in you. Owner's Manual

Remember that wet brakes may have reduced stopping ability. Test your brakes after leaving water. If necessary, apply those several times to let friction dry out the linings.

Riding over rough terrain

Riding over rough terrain should be done with caution. Look out for obstacles which could cause damage to the ATV or could lead to an upset or accident. Be sure to keep your feet firmly fixed on the footboards at all times. Avoid jumping the ATV as loss of control and damage to the ATV may result.

Sliding and skidding

Care should be used when riding on loose or slippery surfaces since the ATV may slide. If unexpected and uncorrected, sliding could cause an accident.

To reduce the possibility for the front wheels to slide in loose or slippery conditions, putting your weight over the front wheels will sometimes help.

If the rear wheels of your ATV start to slide sideways, control can usually be regained (if there is place to do so) by steering in the direction of the slide. Applying the brakes or accelerating is not recommended until you have corrected the slide.

With practice, over a period of time, skill at controlled sliding can be improved. The terrain should be chosen carefully before attempting such maneuvers, since both stability and control are reduced. Bear in mind that sliding maneuvers should always be avoided on extremely slippery surfaces such as ice, since all control may be lost.

What to do of if

This section is designed to be a reference guide only. Make sure to read each section on riding techniques completely.

What to do

- If your ATV doesn't turn when you want it to: Bring the ATV to a stop and practice the turning maneuvers again. Be sure you are positioning your weight on the footboard to the outside of the turn. Put your weight over the front wheels for better control.
- If your ATV begins to tip while turning: Lean more into the turn to regain balance. If necessary, gradually release the throttle and/or steer to the outside of the turn.
- If your ATV can't make it up a hill you are trying to climb: Turn the ATV around if you still have forward. If not, stop, dismount on the uphill side of the ATV and physically turn the ATV around. If the ATV starts to slip backwards DO NOT USE THE REAR BRAKE-the ATV may tip over on top of you. Dismount the ATV on the uphill side.
- If your ATV is crossing a sloping surface: Be sure to ride with your weight positioned towards the uphill side of the ATV to keep proper balance. If the ATV starts to tip, steer down the hill (if there are no obstacles in your way) to get balance again. If you discover that the

ATV is going to tip over, dismount on the uphill side.

- If your ATV meets shallow water: Ride slowly and carefully through slow moving water, watching for obstacles. Be sure to let water drain from the ATV and CHECK YOUR BRAKES FOR PROPER OPERATION when you come out of the water. Do not continue to ride your ATV until you have regained adequate braking ability.
- If your ATV starts to slide sideways:
- Steer in the direction of the slide if you have the place. Applying the brakes or accelerating is not recommended until you have corrected the slide.

PERIODIC MAINTENANCE AND ADJUSTMENT

Periodic check, adjustment and lubrication will keep your machine in the securest and most efficient condition possible. Security is an obligation of the machine owner. The most important points of machine inspection, adjustment and lubrication are explained on the following pages.

Owner's manual and tool kit

You are advised to put this owner's manual and low-pressure tire gauge in the vinyl bag and always carry them along with the owner's tool kit under the seat.

The service information included in this manual is designed to provide you, the owner, with the essential information for completing your own preventive maintenance and minor repairs. The tools provided in the Owner's tool kit are enough for this purpose, except that a torque wrench is also necessary to correctly tighten nuts and bolts.

Periodic maintenance chart for the emission control system

NOTE:

- For ATVs not equipped with an odometer or an hour meter, follow the month maintenance intervals.
- For ATVs equipped with an odometer or an hour meter, follow the km (mi) or hour's maintenance intervals. However, keep in mind that if the ATV isn't used for a long period of time, the month maintenance intervals should be followed.
- Items marked with an asterisk should be performed by a dealer as they require special tools, data and technical skills.

Engine Oil

In order for the engine and transmission to function properly, maintain the engine oil at the proper level, and change the oil and replace the oil filter in accordance with the Periodic Maintenance Chart. Not only do dirt and metal particles collect in the oil, but the oil itself loses its lubricated quality if used too long.

⚠ WARNING

HAZARD

Engine or transmission seizure.

WHAT CAN HAPPEN

Can lock the rear wheels causing an accident and injury.

HOW TO AVOID THE HAZARD

Do not operate this vehicle with insufficient, deteriorated, or contaminated engine oil.

Oil Level Inspection

1. If the oil has just been changed, start the engine and run it for several minutes at idle speed. This fills the oil filter with oil. Stop the engine, and then wait several minutes until the oil settles.

NOTICE
Racing the engine before the oil reaches every part can cause engine seizure. Operation with insufficient, deteriorated, or contaminated engine oil will cause accelerated engine wear.

2. If the vehicle has just been used, wait several minutes for all the oil to drain down.
3. Check the engine oil level through the oil level inspection window in the lower right side of the engine. With the vehicle level front-to-rear and side-to-side, the oil level should come up between the upper and lower lines next to the oil level inspection window.

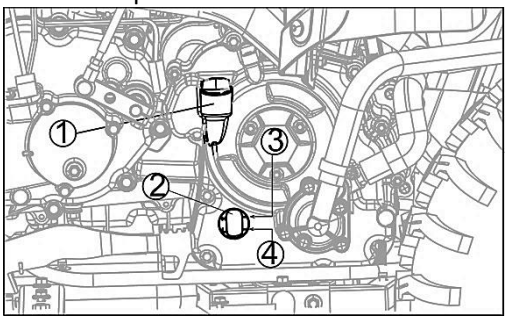

① Oil Filler Cap
② Oil Level Inspection Window
③ Upper Level Line
④ Lower Level Line

4. If the oil level is too high, remove the excess oil through the oil filler opening using a syringe or some other suitable device.

⚠ WARNING

HAZARD

Engine seizure.

WHAT CAN HAPPEN

Can lock the rear wheels causing an accident and injury.

HOW TO AVOID THE HAZARD

Check engine oil level before operating vehicle, and add oil if it is low.

NOTE

If the engine is run without oil, it will be severely damaged.

Oil and/or Oil Filter Change

1. Warm up the engine thoroughly, and then stop it.
2. Place an oil pan beneath the engine.

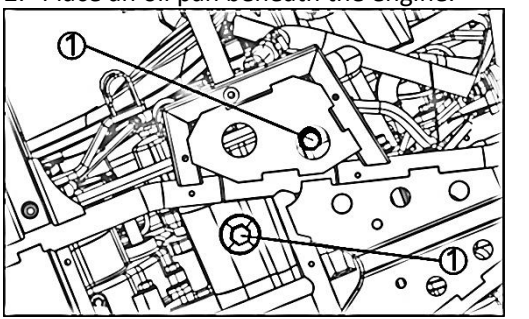

① Drain Plug

② Engine Oil Screen Plug

3. Remove the engine oil drain plug.

⚠ WARNING

HAZARD

Improper disposal of used motor oil.

WHAT CAN HAPPEN

Used motor oil is a toxic substance, which can pollute the environment.

HOW TO AVOID THE HAZARD

Contact your local authorities for approved disposal methods and follow those methods at all times.

4. Clean the oil screen with solvent.
5. Install the engine oil screen plug with the spring O-ring and oil screen. Tighten it to the specified torque.

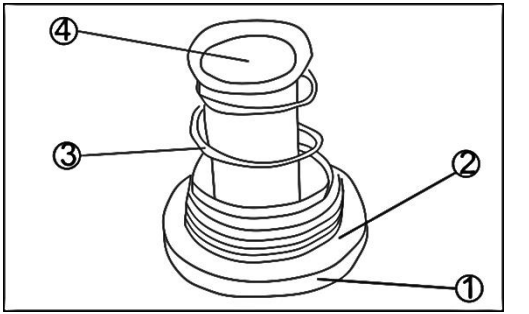

① Engine Oil Screen Plug
② O-ring
③ Spring
④ Oil Screen

NOTE

Replace the O-ring with a new one.

- **Install the engine oil drain plug with its gasket.**
- **Tighten it to the specified torque.**

NOTE
Replace the gasket with a new one. **Fill the engine up to the upper level line with good quality engine oil specified in the table.**

Tightening torque

Engine oil drain plug	25 N.m(2.5kgf.m,18ft.lb
Engine oil screen play	15 N.m(1.5kgf.m,11ft.lb

Engine oil

Viscosity: SAE 10W-40
Capacity: 1.6L(1.7 US qt)
1.8L(1.9 US qt)
(when engine is completely dry)

NOTE
Do not add any chemical additive to the oil. Oils fulfilling the above requirements are fully formulated and provide adequate lubrication for the engine.

Although 10W-40 engine oil is the recommended oil for most conditions, the oil viscosity may need to be changed to accommodate atmospheric conditions in your riding area.

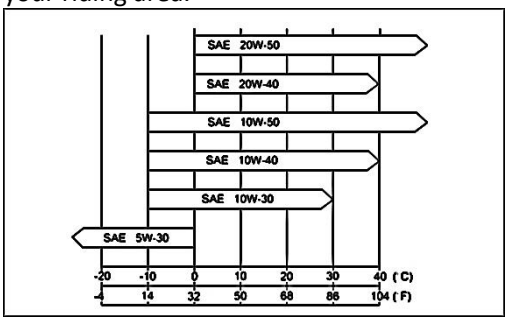

6. Run the engine for several minutes.
7. Check the oil level.

Oil Level Inspection

1. With the vehicle level front-to-rear and side-to -side, remove the oil level inspection bolt.
2. Remove the screws and bolts.

Clear the projections from the front and rear fenders, and remove the right footboard.

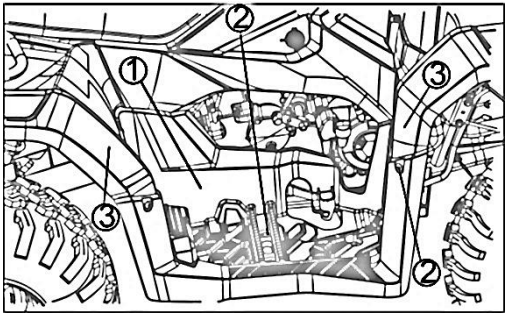

① Right Footboard
② Bolts
③ Projection

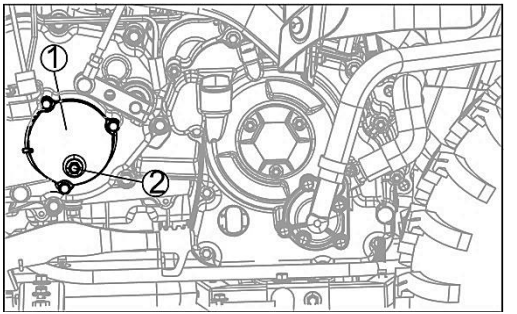

① Transmission Gear Case

② Oil Level Inspection Bolt

3. Make sure the oil level reaches the oil level check .hole.

NOTICE
Be careful not to allow any dirt or foreign materials to enter the transmission cases.

4. Check the oil level. If it is insufficient, add oil through the oil filler openings as necessary. The oil level should come to the bottom thread of oil level check hole.
5. Install the oil level inspection bolt.
6. Fit the projections of right footboard to the front and rear fenders, and then install the right footboard
7. Tighten the bolts and screws.

Tightening Torque

Oil Level Inspection Bolt	20 N-m (2.0 kgf-m, 15 ft.lb)

Transmission Case Oil Change

1. Warm up the engine thoroughly, and then stop it.
2. Loosen the screws and bolts to remove the right footboard.
3. Place an oil pan beneath the transmission case.

4. Remove the transmission case oil filler bolt.

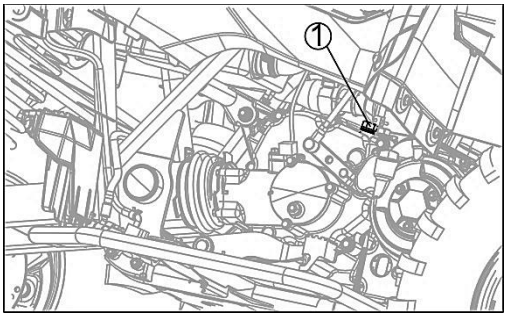

① Oil Filler Bolt

5. Remove the transmission case oil drain plug

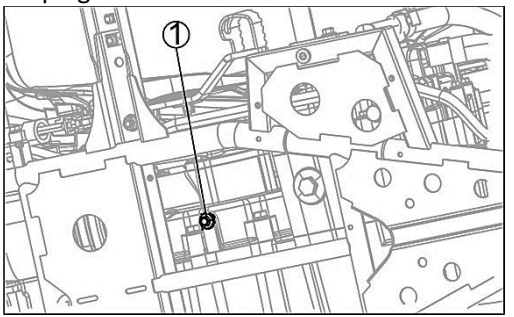

① Drain Plug

6. Let the oil completely drain with the vehicle or level ground.

⚠ WARNING

HAZARD

Improper disposal of used transmission case oil.

WHAT CAN HAPPEN

Used transmission case oil is a toxic substance, which can pollute the environment.

HOW TO AVOID THE HAZARD

Contact your local authorities for approved disposal methods and follow those methods at all times.

7. After the oil has completely drained out, install the drain plug and gasket. Replace the gasket with new ones.

Tightening Torque

Transmission Case Drain Plug	20 N-m (2.0 kgf-m, 15 ft.lb)

⚠ WARNING

HAZARD

Getting transmission case oil on tires.

WHAT CAN HAPPEN

Can make them slippery which can cause an accident and injury.

HOW TO AVOID THE HAZARD

Clean up any spilled oil immediately using soap and water.

1. Fill the transmission gear case to the bottom thread of the oil level check whole with good quality oil specified in the table.

Transmission Case Oil

Oil Capacity	0.6 L (0.6 US qt)
Oil Viscosity	SAE80W-90

NOTE
Do not add any chemical additive to the oil. Oils fulfilling the above requirements are fully formulated and provide adequate lubrication for the transmission.

2. Install the oil filler bolt and parts removed.

Tightening Torque

Transmission Case Oil Filler Bolt	20 N-m (2.0 kgf-m, 15 ft.lb)

Rear Final Gear Case Oil

In order for the pinion and ring gears to function properly, check the oil level and change the oil in accordance with the Periodic Maintenance Chart.

⚠ WARNING

HAZARD

Operating this vehicle with insufficient, deteriorated, or contaminated gear case oil.

WHAT CAN HAPPEN

Seizure of pinion and ring gears in final gear case can lock the rear wheels causing an accident and injury.

HOW TO AVOID THE HAZARD

Do not operate this vehicle with insufficient, deteriorated, or contaminated gear case oil.

NOICTE
Vehicle operation with insufficient, deteriorated, or contaminated oil causes accelerated wear of the pinion and ring gears.

Oil Level Inspection

1. With the vehicle level front-to-rear and side-to -side, remove the oil level inspection bolt.
2. Make sure the oil level reaches the oil level check hole.

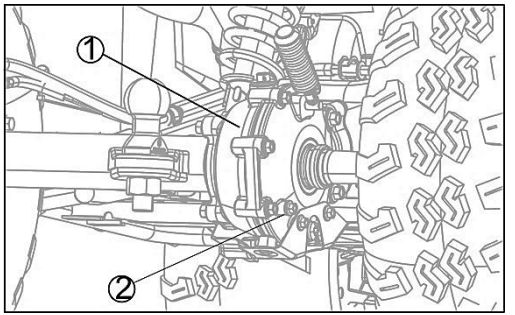

① Rear Final Gear Case.

② Oil Level Inspection Bolt

NOICTE
Be careful not to allow any dirt or foreign materials to enter the gear cases.

3. Check the oil level. If it is insufficient, add oil through the oil filler openings as necessary. The oil level should come to the bottom thread of oil level check hole.

4. Install the oil level inspection bolt.

Oil Level Inspection Bolt	20 N-m (2.0 kgf-m, 15 ft.lb)

NOTE
Rear final gear case use different types of oils. Use the specified type of oil in the final gear case.

Oil Change

NOTE
Rear final gear case oil drains easily and picks up any sediment when the oil is warmed up by running the vehicle.

5. With the vehicle level, place an oil pan beneath the gear case.
6. To remove the drain bolt, first remove the rear guard under the gear case by releasing fitting bolts.

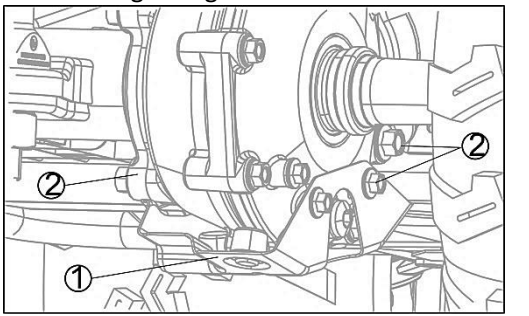

① Rear Guard

② Fitting Bolts

7. Remove the filler bolt and drain bolt.

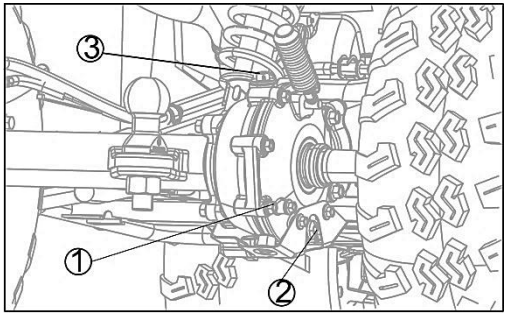

① Rear Final Gear Case
② Drain Bolt
③ Filler Bolt

⚠ WARNING

HAZARD

Improper disposal of used gear case oil.

WHAT CAN HAPPEN

Used gear case oil is a toxic substance, which can pollute the environment.

HOW TO AVOID THE HAZARD

Contact your local authorities for approved disposal methods and follow those methods at all times.

8. After the oil has completely drained out, install the drain bolt and gasket. Replace the gasket with a new one

Tightening Torque

Rear Final Gear Case Drain Bolt	20 N-m (2.0 kgf-m, 15 ft.lb)

⚠ WARNING

HAZARD

Getting gear case oil on tires.

WHAT CAN HAPPEN

Can make them slippery which can cause an accident and injury.

HOW TO AVOID THE HAZAR

Dted0Clean up any spilled oil immediately using soap and water.

Oil Capacity/ Oil Viscosity

Oil Capacity	0.15 L (0.16 US qt)
Oil Viscosity	SAE80W-90

NOTE

Do not add any chemical additive to the oil. Oils fulfilling the above requirements are fully formulated and provide adequate lubrication for the rear final gear case.

9. Install the filler bolt.

Tightening Torque

Rear Final Gear Case Filler Bolt	15 N-m (1.5 kgf-m, 11 ft-lb)

10. Install the rear guard as and tighten the fitting bolts to the specified torque.

Tightening Torque

Fitting Bolts	31 N-m (3.2 kgf-m, 23 ft-lb)

Cooling System

Radiator and Cooling Fan：

Check and clean the screen and radiator fins for obstruction by insects or mud in accordance with the Periodic Maintenance Chart. In dusty areas, the radiator should be cleaned more frequently than the recommended interval.

⚠ WARNING

HAZARD

The cooling fan turns on automatically, even with the ignition switch off.

WHAT CAN HAPPEN

Can cause injury to your hands if you touch the turning fan.

HOW TO AVOID THE HAZARD

Keep your hands and clothing away from the fan blades at all times.

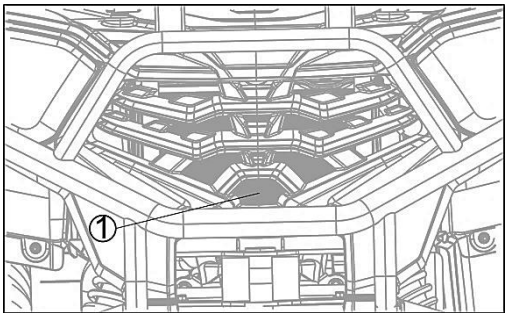

① Radiator Screen

1. Clean the grille, screen, and radiator fins of any obstructions with a stream of low-pressure water.
2. If insects or mud cannot be completely removed, it should be cleaned by an authorized dealer.

NOTICE
Using high-pressure water, as from a car wash facility, could damage the radiator fins and impair the radiator's effectiveness. **Do not obstruct or deflect airflow through the radiator by installing unauthorized accessories in front of the radiator or behind the cooling fan. Interference with the radiator airflow can lead to overheating and consequent engine damage.**

Coolant:

Coolant absorbs heat from the engine and transfers it to the air at the radiator. If the coolant level becomes low, the engine overheats and may suffer damage. Check the coolant level each day before operating the vehicle, and replenish coolant if the level is low. Change the coolant in accordance with the Periodic Maintenance Chart.

Coolant Level Inspection

Situate the vehicle on level ground.

Check the coolant level through the coolant level gauge on the reserve tank. The coolant level should be between the "MAX" and "MIN" marks.

NOTE
Check the level when the engine is cold (room or atmospheric temperature).

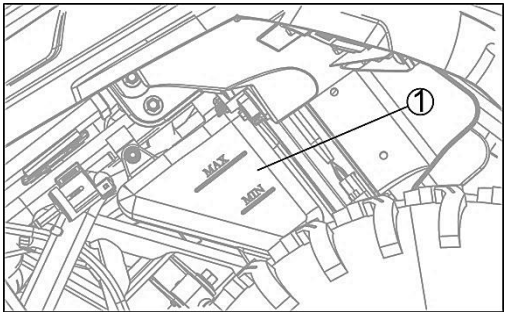

① Reserve Tank

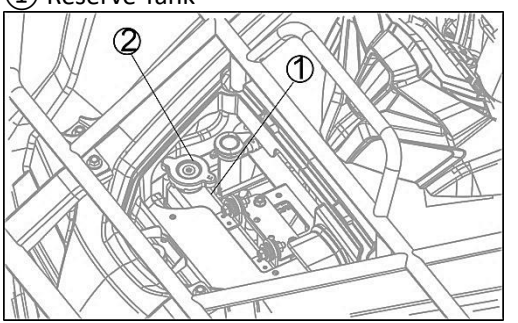

① Reserve Tank.

② Cap.

3. If the amount of coolant is insufficient, remove the cap from the reserve tank and add coolant through the filler opening to the "MAX" mark. Install the cap.

Recommended Coolant Solution

Soft Water 50%: Coolant 50% (5 : 5)
Recommended Coolant:
Permanent type coolant (ethylene glycol plus corrosion and rust inhibitor chemicals for aluminum engines and radiator).

NOTE
In an emergency you can add water alone to the coolant reserve tank, however it must be returned to the correct mixture ratio by the addition of antifreeze concentrate as soon as possible. **A permanent type of antifreeze is installed in the cooling system when shipped. It is colored green and contains ethylene glycol. It is mixed at 30% and has the freezing point of-15°C (5°F).**

NOTICE
If coolant must be added often, or the reserve tank completely runs dry, there is probably leakage in the system. Have the cooling system inspected by your authorized dealer.

Checking plug

The standard spark plug is shown in the table. The spark plugs should be taken out in accordance with the Periodic Maintenance Chart for cleaning, inspection, and resetting of the plug gap.

Maintenance

If the plugs are oily or have carbon build up on them, clean them. The plugs may also be cleaned using a high flash-point solvent and a nonmetal brush (nylon etc.). Measure the gap with a wire-type thickness gauge, and adjust the gap if incorrect by bending the outer electrode. If the spark plug electrodes are corroded or damaged, or if the insulator is cracked, replace the plugs.

Use the standard plug. To remove the spark plug

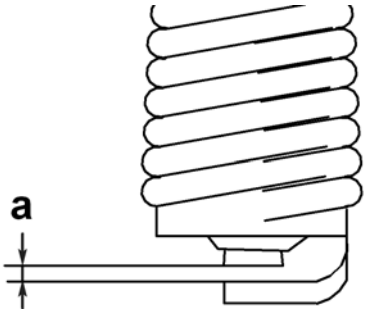

a). Spark plug gap

1. Remove the spark plug cap.
2. Remove the spark plug with the spark plug wrench.

To check the spark plug

1. Check that the porcelain insulator around the center electrode of the spark plug is a medium-to-light tan (the ideal color when the ATV is ridden normally).

⚠ WARNING

HAZARD

Hot exhaust pipe.

WHAT CAN HAPPEN

Can burn your hands.

HOW TO AVOID THE HAZARD

Check the exhaust pipe first and, if hot, wait until it gets cold.

NOTE

If the spark plug shows a distinctly different color, the engine could be operating improperly. Do not attempt to diagnose such problems yourself. Instead, have a dealer check the ATV.

2. Check the spark plug for electrode erosion and excessive carbon or other deposits, and replace it if necessary.

To install the spark plug

1. Measure the spark plug gap with a wire thickness gauge and, if necessary, adjust the gap to specification.

Spark plug gap:
0.6–0.7 mm (0.024–0.028 in)

2. Clean the surface of the spark plug gasket and its mating surface, and then wipe off any grime from the spark plug threads.
3. Install the spark plug with the spark plug wrench, and then tighten it to the specified torque.

Tightening torque:
Park plug:
12.5 Nm (1.25 m·kgf, 9.1 ft·lbf)

4. Install the spark plug cap.

Air filter cleaning

A clogged air cleaner restricts the engine's air intake, increases fuel consumption, reduces engine power, and causes spark plug fouling.

⚠ WARNING

HAZARD

A clogged air cleaner.

WHAT CAN HAPPEN

May allow dirt and dust to enter the carburetor and stick the throttle open. This could cause an accident.

HOW TO AVOID THE HAZARD

Clean the air cleaner regularly and according to the instructions in this section.

NOTICE

A clogged air cleaner may allow dirt and dust to enter the engine causing excessive wear and possibly engine damage.

The air cleaner element must be cleaned in accordance with the Periodic Maintenance Chart. In dusty areas, the element should be cleaned more frequently than the recommended interval. After riding through rain or on muddy roads, the element should be cleaned immediately.

Element Cleaning

1. Remove the seat.
2. Pull release the snaps and remove the air cleaner housing cover.

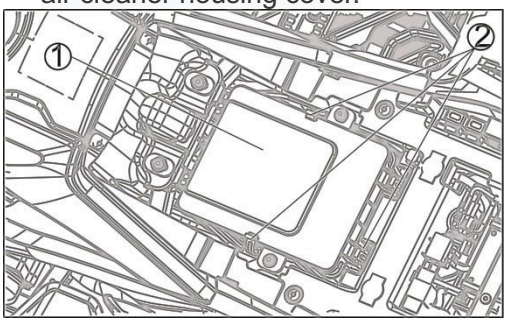

① Air Cleaner Housing Cover

② Snaps

3. Loosen the clamp screw and pull out the element and element frame from the air cleaner housing.

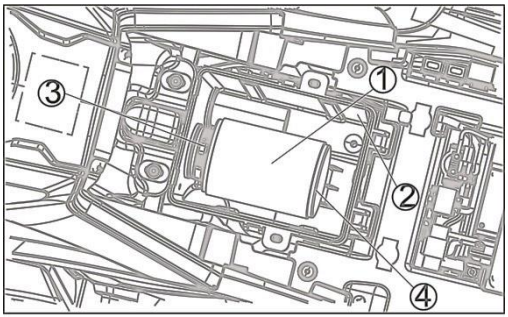

① Air Cleaner Element

② Air Cleaner Housing

③ Clamp Screw

④ Element Frame

Check inside the intake tract and carburetor for dirt. If dirt is present, clean the intake tract and carburetor thoroughly. You may also need to replace the air cleaner and seal the air cleaner housing and intake tract.

4. Push a clean, lint-free towel into the intake tract to keep dirt or other foreign material from entering.
5. Wipe out the inside of the air cleaner housing with a clean damp towel.

⚠ WARNING

HAZARD

Dirt or dust allowed into the carburetor.

WHAT CAN HAPPEN

Can cause the throttle to stick open. This could cause an accident.

HOW TO AVOID THE HAZARD

Be sure to cover the air cleaner opening to the carburetor after removing the element. Clean the air cleaner housing as described in this section.

NOTICE

If dirt gets through into the engine, excessive engine wear and possibly engine damage will occur.

6. Clean the element in a bath of high flash-point solvent using a soft bristle brush.

⚠ WARNING

HAZARD

Cleaning the air cleaner element with gasoline or low flash-point solvent.

WHAT CAN HAPPEN

Gasoline or low flash-point solvents are extremely flammable and can be explosive under certain conditions.

A fire or explosion can cause severe injury or death.

HOW TO AVOID THE HAZARD

Use a high flash-point solvent to clean the air cleaner element. Never use gasoline or low flash-point solvents.

Clean the element in a well-ventilated area free from any source of flame or sparks; this includes any appliance with a pilot light.

7. Squeeze it dry in a clean towel. Do not wring the element or blow it dry; the element can be damaged.

8. Check the element for visible damage. If it is torn, punctured, or hardened, replace it. After cleaning, saturate the element with a high -quality foam air cleaner oil, squeeze out the excess, then wrap it in a clean rag and squeeze it as dry as possible. Be careful not to tear the element.
9. Install the element on the inner metal net.
10. Install the air cleaner element to the element frame
11. Install the element in the air cleaner housing, and then tighten the mounting clamp screw securely.
12. Clamp the air cleaner housing cover securely.
13. Install the seat.

Dust, Oil and/or Water Inspection

14. Remove the drain cap at the bottom of the air cleaner housing to expel dust oil and/or water accumulated inside the housing. Be sure to refit the drain cap after the inspection.

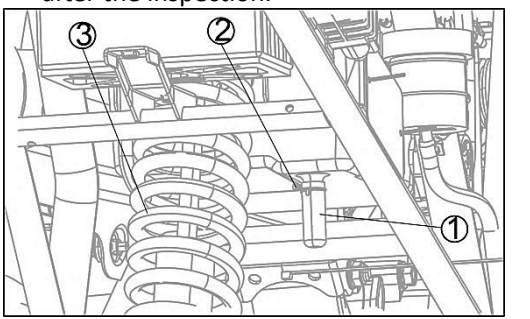

① Drain Cap
② Clamp
③ Rear Suspension

Carburetor adjustment

The carburetor is a principal part of the engine and requires very complex adjustment. Most adjusting should be left to your dealer who is professional and experienced on this. However, the idling speed may be performed by the owner as a part of the usual maintenance routine.

Idle speed adjustment

1. Start the engine and warm it up for a few minutes at nearly 1,000 to 2,000 r/min. Sometimes rev the engine to 4,000 to 5,000 r/min. The engine is warm when it quickly responds to the throttle.
2. Connect the tachometer and set the idle to the specified idling speed by adjusting the throttle stop screw. Turn the screw in to increase engine speed, and out to decrease engine speed.

Valve clearance adjustment

The proper valve clearance changes with use, leading to incorrect fuel/air supply or engine noise. To prevent this, the valve clearance must be adjusted periodically. This adjustment however, should be left to a professional service technician.

Spark Arrester

This vehicle is equipped with a spark arrester approved for off-road use by the U.S. Forest Service. It must be properly maintained to ensure its efficiency. In accordance with the Periodic Maintenance Chart, clean the spark arrester.

⚠ WARNING

HAZARD

Incorrectly installed spark arrester.

WHAT CAN HAPPEN

Can emit sparks which can cause a fire.

HOW TO AVOID THE HAZARD

Be sure the spark arrester/muffler and drain plug are installed securely.

⚠ WARNING

HAZARD

Hot muffler.

WHAT CAN HAPPEN

Can burn your hands.

HOW TO AVOID THE HAZARD

Wear gloves while cleaning the spark arrester. The engine must be running during this procedure.

1. Remove the bolt from the muffler.

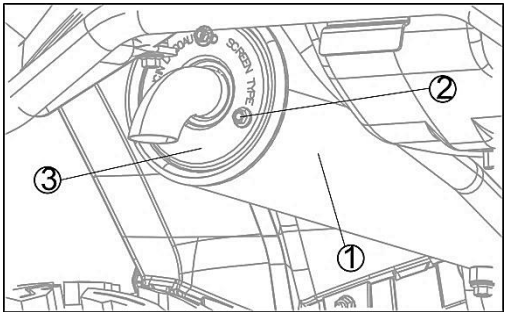

① Muffler

② Bolt

③ Spark Arrester

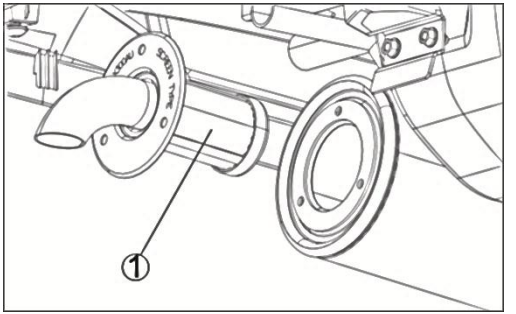

① Spark Arrester

2. In an open area away from combustible materials, start the engine with the transmission in neutral.

⚠ WARNING

HAZARD

Cleaning the spark arrester near combustible materials.

WHAT CAN HAPPEN

Can cause a fire resulting in burns.

HOW TO AVOID THE HAZARD

Never run the engine with the spark arrester disassembled near combustible materials. Hot carbon particles are emitted during the cleaning procedure.

3. Raise and lower engine speed while tapping on the muffler with a rubber mallet until carbon particles are purged from the muffler.

⚠ WARNING

HAZARD

Running the engine without ventilation.

WHAT CAN HAPPEN

Breathing exhaust gas leads to carbon monoxide poisoning, asphyxiation, and death. Exhaust gases contain carbon monoxide; a colorless, odorless, poisonous gas.

HOW TO AVOID THE HAZARD

Do not start or run the engine in a closed area such as a garage.

4. Stop the engine.
5. Install the spark arrester in place and tighten the spark arrester bolt to the specified torque.

Tightening Torque

Spark Arrester Bolt	11 N-m (1.1 kgf-m, 97 in.lb)

Shift Lever

NOTICE
Before shifting, you must stop the machine and return the throttle lever to its closed position until the engine speed to the specified idling speed. Otherwise, the transmission may be damaged.

1. Check operation of the lever before start the engine.
2. Make sure moving the shift lever into the "N" position of the shift guide.
3. Turn the ignition switch to "ON" and check the neutral indicator light goes on.

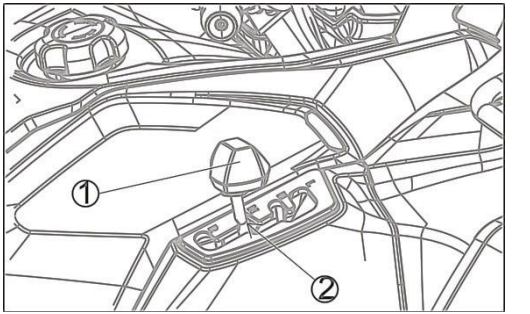

① Shift Lever

② "N" position

⚠ WARNING

HAZARD

Operating with improperly adjusted drive select lever.

HAZARDWHAT CAN HAPPEN

You may lose control of the gear shifting, which lead to accident.

HOW TO AVOID THE HAZARD

Make sure moving the shift lever into the "N" position and neutral indicator light goes on before start the engine.

Shift Lever Adjustment

1. Turn the ignition switch is to ON and make sure the engine stop switch in the OFF " " position.
2. Loosen the locknuts of rod. Shift the gear to neutral by moving the shift lever and/or turn the rod. (The neutral indicator light goes on.)

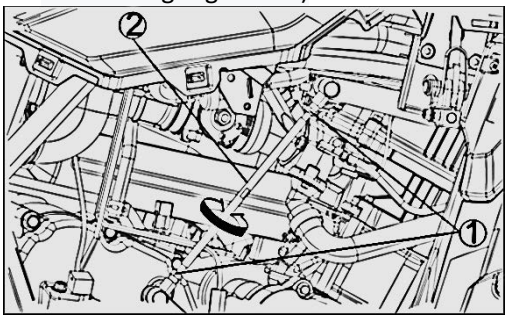

① Locknuts

② Rod

3. Provide standard tip/phillips screwdriver (tool kit) and pass the standard tip/philips screwdriver through the shift arm into the index hole at the transmission case cover.

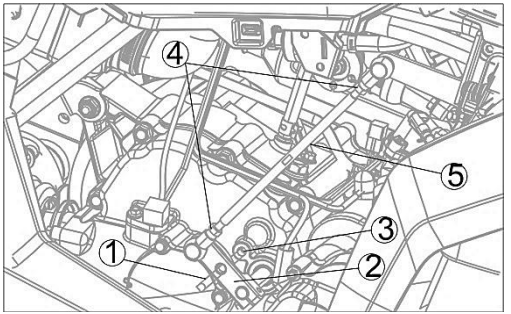

① Standard Tip/Phillips Screwdriver

② Shift Arm

③ Index Hole

④ Locknuts

⑤ Rod

4. Turn the rod clockwise or counterclockwise until the drive select lever into the "N" position of the shift guide and tighten the locknuts, then pull out the standard tip/phillips screwdriver.

5. After adjustment, start the engine and test ride the ATV to be sure the drive select lever is operating properly.

Belt Drive Transmission (CVT)

The vehicle is equipped with a belt-driven Continuously Variable Transmission (CVT).This automatic drive system, although simple to operate, does require periodic inspection since the drive belt wears with normal use

Inspection should be done by an authorized dealer.

Periodic Drive Belt Inspection Requirements Neglect, abuse, or failure to maintain the transmission can result in belt damage and failure.

Inspection of the transmission drive

belt is required at least every 2 000 km (1 200 mi.) or year of use whichever comes first, since drive belts wear with normal use. More frequent inspection is necessary if the vehicle is subjected to hard usage. If excessive belt slippage occurs, do not ride the vehicle until damaged components are repaired.

⚠ WARNING

HAZARD

Moving parts are exposed when the torque converter cover is removed.

WHAT CAN HAPPEN

Moving parts can cause severe bodily injuries and/or catch clothing and cause injury.

HOW TO AVOID THE HAZARD

Never operate the vehicle without the torque converter cover installed.

Causes of accelerated Belt Wear

Avoid these hard usage conditions to obtain maximum belt life and prevent accelerated belt wear and deterioration.

1. Operating the vehicle in high range while climbing hills, carrying heavy loads,

or pulling a trailer.

2. Exceeding maximum vehicle load or trailer weight.
3. Operating in mud or water deeper than recommended.
4. Operating in extremely dusty conditions.
5. Continued operation with excessive belt slippage.
6. Failure to apply the foot and hand brake controls while descending hills.
7. Indications of Excessive Belt Slippage

Excessive slippage will accelerate belt wear and lead to failure. Recognize these symptoms of excessive belt slippage. If excessive slippage occurs, do not continue to ride the vehicle until all damaged components are repaired.

1. Smell of burning rubber.
2. Visible white smoke.
3. Sluggish initial acceleration or loss of power.
4. Engine rpm is higher for the same vehicle speed.
5. Engine vibration.

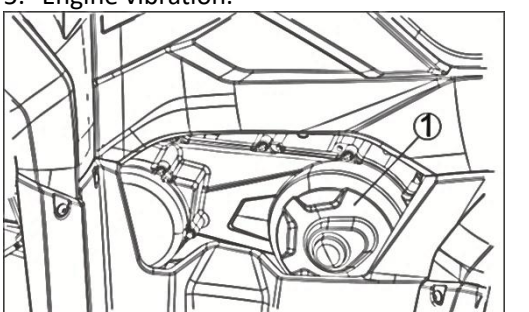

① Belt Drive Transmission (CVT)

Brakes

Disc and brake pad wear is automatically compensated for and has no effect on the brake levers and pedal action. There are no parts that require adjustment on the brake.

⚠ WARNING

HAZARD

Air in brake line.

WHAT CAN HAPPEN

Can make the brake feel mushy or soft. This may cause reduced braking performance or brake failure and result in an accident.

HOW TO AVOID THE HAZARD

If brake lever travel is excessive or the brake feels mushy, have an authorized dealer inspect it immediately.

Brake Wear Inspection

In accordance with the Periodic Maintenance Chart, inspect the brakes for wear. For each front disc brake caliper, if the thickness of either pad is less than 1 mm

(0.04 in.), replace both pads in the caliper as a set. For the rear disc brake caliper, if the thickness of the pad is less than 1 mm (0.04 in.), replace the pad in the caliper. Pad wear inspection and pad replacement should be done by an authorized dealer.

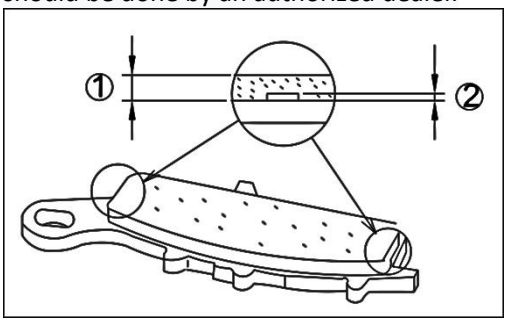

① Lining Thickness

② 1 mm (0.04 in.)

Disc Brake Fluid

In accordance with the Periodic Maintenance Chart, inspect the brake fluid level in the front and rear brake fluid reservoirs and change the brake fluid. The brake fluid should also be changed if it becomes contaminated with dirt or water.

Fluid Requirement

Use extra heavy-duty brake fluid only from a container marked DOT4.

NOTICE
Do not spill brake fluid onto any painted surface. It will damage the paint. If brake fluid is spilled, wash it off immediately with water.

⚠ WARNING

HAZARD

Contaminated brake fluid.

WHAT CAN HAPPEN

Can reduce braking performance or cause brake failure, resulting in an accident.

HOW TO AVOID THE HAZARD

Do not use brake fluid from a container that has been left open or that has been unsealed for a long time. The fluid will absorb moisture and may be contaminated with dust and dirt.

⚠ WARNING

HAZARD

Damaged or leaking brake hoses and fittings.

WHAT CAN HAPPEN

Can cause brake failure resulting in an accident.

HOW TO AVOID THE HAZARD

Inspect brake fluid level regularly.

Replace any damaged or leaking brake hoses and fittings.

Maintain the brake system in accordance with the Periodic Maintenance Chart.

Cable inspection and lubrication

The operation and the condition of all control cables should be checked before each ride, and the cables and cable ends should be lubricated if necessary. If a cable is damaged or does not move smoothly, have a dealer check or replace it.

⚠ WARNING

POTENTIAL HAZARD

Damaged control cables.

WHAT CAN HAPPEN

Corrosion can result when the cable sheaths become damaged, and cables can also become frayed or kinked, which could restrict the operation of controls and lead to an accident or injury.

HOW TO AVOID THE HAZARD

Inspect cables frequently. Replace damaged cables.

Wheel removal

1. Raise the wheel by placing a suitable stand under the frame.
2. Remove the nut from the wheel.
3. Remove the wheel assembly

Wheel installation

When installing the wheel, reverse the removal procedure.

Tighten the wheel bolts to the specified torques. Battery

Inspect the corrosion appearance of the electrodes by the electrolyte leaked.

Replenishing the battery fluid

A poorly maintained battery will corrode and discharge quickly. The battery should be checked at least once a month.

1. When the machine is not to be used for a month or longer, Disconnect the negative (-) lead and the positive (+) lead, then remove the battery and put it in a cool, dark place. Thoroughly recharge the battery before reusing.
2. If the battery is to be stored for a longer period than the above, check the rated voltage at least once a month and recharge the battery when it is too low.
3. Always make sure the connections are right when putting the battery back in the machine. Make sure the breather hose is properly connected and is not damaged or obstructed.

Fuse replacement

1. The fuse case is placed under the seat. The fuse is placed in the starting relay.
2. If the fuse is blown, turn off the main switch and equip a new fuse of the specified amperage. Then turn on the switches. If the fuse immediately blows again, consult your dealer. .

Troubleshooting charts

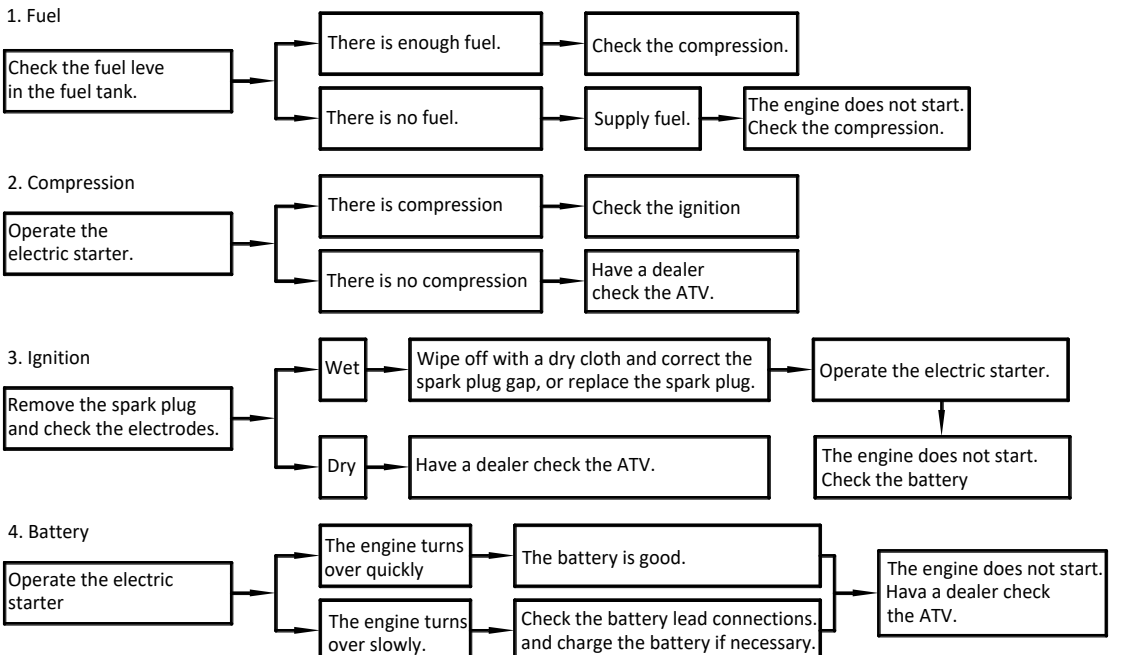

CLEANING AND STORAGE

Cleaning

Frequent, thorough cleaning of your machine will not only enhance its appearance but will improve its general performance and extend the useful life of many components.

1. Before cleaning the machine.

a. Block off the end of the exhaust pipe to prevent water entry. A plastic bag and strong rubber band may be used.

b. Assure the spark plug and all filler caps are correctly installed.

2. If the engine case is extremely greasy, apply degreaser with a paintbrush. Do not apply degreaser to the wheel axles.
3. Rinse the dirt and degreaser off with a garden hose. Use only sufficient pressure to do the job.
4. Once the majority of the dirt has been hosed off, wash all surfaces with warm water and mild, detergent-type soap. An old toothbrush or bottle brush is handy for hard-to-get-at places.
5. Rinse the machine off immediately with clean water and dry all surfaces with a chamois, clean towel or cloth.
6. Clean the seat with vinyl upholstery cleaner to keep the cover pliable and glossy.

7. Automotive type wax may be applied to all pained and chrome plated surfaces. Avoid combination cleaner-waxes. Many contain abrasives which may mar the paint or protective finish. When finished, start the engine and let it idle for several minutes.

Storage

Long term storage (60 days or more) of your machine will request some protective procedures to guard against deterioration. After completely cleaning the machine, prepare for storage as follows:

1. Fill the fuel tank with fresh fuel
2. Remove the spark **Helmet** plug, pour about one tablespoon of SAE 10W30 or 20W40 motor oil in the spark plug hole and reinstall the spark plug. Ground the spark plug wire and turn the engine over several times to coat the cylinder wall with oil.
3. Lubricate all control cables.
4. Block up the frame to raise all wheels off the ground.
5. Tie a plastic bag over the exhaust pipe outlet to prevent moisture from entering.
6. If storing in a damp or salty atmosphere, coat all exposed metal surfaces with a light film of oil. Do not apply oil to any rubber parts or the seat cover.

7. Remove the battery and charge it. Store it in a dry place and recharge it once a month. Do not store the battery in an extremely warm or cold place (less than 0℃(30°F) or more than 30℃(90°F).

SPECIFICATION

Model	LX300AU
Dimension:	
Overall length	1940 mm
Overall width	1095 mm
Overall height(22in Tires)	1150mm
Seat height(22in Tires)	853 mm
Wheel base	1210 mm
Min ground clearance (22in Tires)	165 mm
Minimum turning radius	2900 mm
Dry weight: (22in Tires)	248 kg
Engine:	
Type	LX172MN/LX172MN-A
Cylinder arrangement	Single cylinder
Displacement	271 cm3
Bore x Stroke	72.8×65.2 mm
Compression ratio	11 : 1
Starting system	Electric starter
Lubrication systems:	Force and splash

SPECIFICATION

Model	LX300AU
Rider Capacity	1 person
Engine Oil Capacity for crankcase	1.6L
Engine Oil Capacity for transmission	0.6L
Fuel Capacity	14L
Starting	Electric
Transmission	CVT
Front Suspension	Double wishbone
Rear Suspension	Swing arm
Front/Rear Brakes	Disc brake
Parking Brake	Mechanical Lock
Front Tires	22 x 7 – 10/24×8-12/24×8-10
Rear Tires	22 x 10 - 10 /24×10-12/24×10-10
pressure	The specific tire pressure is shown on the tire
Neutral Indicator	Standard(green)
Max. Load Capacity	150kg
Battery(Green)	12V-12Ah

Maintenance record

Copies of work orders and/or receipts for parts you purchase and install will be required to document maintenance done in accordance with the warranty. The chart below is printed only as a reminder to you that the maintenance work is required. It is not acceptable proof of maintenance work.

MAINTENANCE INTERVAL			DATE OF SERVICE	MILEAGE	SERVICING DEALER NAME AND ADDRESS	REMARKS
month	km(mi)	hours				
1	320(200)	20				
3	1300(800)	80				
6	2500(1600)	160				
12	5000(3200)	320				
18	7500(4800)	480				
24	10000(6400)	640				
30	12500(8000)	800				
36	15000(9600)	960				
42	17500(11200)	1120				
48	20000(12800)	1280				
54	22500(14400)	1440				
60	25000(16000)	1600				

360133001-0001

⚠ WARNING

Improper ATV use can result in SEVER INJURY or DEATH

ALWAYS USE AN APPROVED HELMET AND PROTECTIVE GEAR

NEVER USE ON PUBLIC ROADS

NEVER CARRY PASSENGERS

NEVER USE WITH DRUGS OR ALCOHOL

NEVER operate:

- without proper training or instruction.
- at speeds too fast for your skills or the conditions.
- on public roads-a collision can occur with another vehicle.
- with a passenger-passengers affect balance and steering and increase risk of losing control.

ALWAYS:

- use proper riding techniques to avoid vehicle overturns on hills andrough terrain and in turns.
- avoid paved surfaces-pavement may seriously affect handling and control.

LOCATE AND READ OWNER'S MANUAL FOLLOW ALL INSTRUCTIONS AND WARNINGS.

PRINTED IN CHINA
2021.05

		Dopo 15 gg (o ai primi 300 km)	Ogni 6 mesi (o 2500 km)	Ogni 12 mesi (o 5000 km)	Ispezioni pre-guida
Olio motore controllo		•	Controllare ogni 500 km		•
Olio motore sostituzione	1,6 L (**)	S	S	S	
Filtro olio			•	•	
Candela	BOSCH-D8RC		•	S	
Iniezione elettronica				•	
Cavo acceleratore		•	•	•	•
Filtro aria*			•	S	
Gioco valvole	Asp. 0,08 mm Sc. 0,12 mm		•	•	
Liquido refrigerante	Organico	•	Sostituire ogni 2 anni		•
Cinghia trasmissione			•	S	
Rulli centrifughi			•	•	
Frizione			•	•	
Olio ingranaggio trasmissione	0,6 L (**)	S	S	S	
Olio coppia conica finale	0,18 L (**)	S	S	S	
Fluido freni	DOT3(**)	•	Sostituire ogni 2 anni		•
Freni		•	•	•	•
Filtro carburante				•	
Viti e dadi		•	•	•	
Cuscinetti di sterzo		•	•	•	•
Pneumatici		•	•	•	•
Batteria	12 V 12Ah		•	•	

(•) Controllo. Inclusa anche pulizia, registrazione, riparazione o sostituzione (S) Sostituzione
(*) Sostituire più spesso se il veicolo viene utilizzato su strade polverose o fuori strada
(**) Per le specifiche complete fare riferimento al manuale di Uso e Manutenzione
In caso di dubbio contattare un punto di assistenza **LONCIN** appena possibile.